Report No. CG-D-21-97

Signal Lamp Development for Minor Aids to Navigation

Joseph P. Sargent, Jr.

U.S. Coast Guard
Research and Development Center
1082 Shennecossett Road
Groton, CT 06340-6096

DISTRIBUTION STATEMENT A
Approved for public release;
Distribution Unlimited

FINAL REPORT
June 1996

DTIC QUALITY INSPECTED 2

This document is available to the U.S. public through the
National Technical Information Service, Springfield, Virginia 22161

Prepared for:

19971119 115

U.S. Department of Transportation
United States Coast Guard
Office of Research and Development
Washington, DC 20593-0001

NOTICE

This document is disseminated under the sponsorship of the Department of Transportation in the interest of information exchange. The United States Government assumes no liability for its contents or use thereof.

The United States Government does not endorse products or manufacturers. Trade or manufacturers' names appear herein solely because they are considered essential to the object of this report.

The contents of this report reflect the views of the Coast Guard Research & Development Center. This report does not constitute a standard, specification, or regulation.

G.T. Gunther
Commanding Officer
United States Coast Guard
Research & Development Center
1082 Shennecossett Road
Groton, CT 06340-6096

Technical Report Documentation Page

1. Report No.	2. Government Accession No.	3. Recipient's Catalog No.
CG-D-21-97		

4. Title and Subtitle	5. Report Date
Signal Lamp Development for Minor Aids to Navigation	June 1996
	6. Performing Organization Code: Project No. 2700.3.2
7. Author(s): Joseph P. Sargent, Jr.	8. Performing Organization Report No.: R&DC 17/96
9. Performing Organization Name and Address: U.S. Coast Guard, Research and Development Center, 1082 Shennecossett Road, Groton, Connecticut 06340-6096	10. Work Unit No. (TRAIS)
	11. Contract or Grant No.
	13. Type of Report and Period Covered: Final Report
12. Sponsoring Agency Name and Address: Department of Transportation, U.S. Coast Guard, Office of Research and Development, Washington, D.C. 20593-0001	14. Sponsoring Agency Code: Commandant (G-SEC-2), USCG Headquarters, Washington, D.C. 20593-0001

15. Supplementary Notes

The R&DC technical point of contact is CDR Jerry Timpe, 860-441-2829.

16. Abstract

This report documents the research and development effort conducted to find an alternative light source to the standard tungsten filament incandescent lamp used on most minor aids-to-navigation. The goal was a lamp that directly emitted the required color light, with reduced maintenance, and improved reliability. The study evaluated a number of arc lamp technologies including: metal vapor, cold and heated salts, amalgams, and mercury pool lamps. While the effort failed to find a single lamp technology to provide all signal colors used in the navigation system, a liquid electrode (LE)/Argon (Ar) green lamp was developed and tested, and significant advances were made in the development of a neon discharge lamp which emitted a red color.

17. Key Words	18. Distribution Statement
light, lamp, lantern, aids-to-navigation, International Association of Lighthouse Authorities (IALA), arc lamp, liquid electrode, incandescent, Argon, Neon, tungsten	Document is available to the U.S. public through the National Technical Information Service, Springfield, Virginia 22161

19. Security Classif. (of this report)	20. SECURITY CLASSIF. (of this page)	21. No. of Pages	22. Price
UNCLASSIFIED	UNCLASSIFIED		

Form DOT F 1700.7 (8/72) Reproduction of form and completed page is authorized

METRIC CONVERSION FACTORS

Approximate Conversions to Metric Measures

Symbol	When You Know	Multiply By	To Find	Symbol
	LENGTH			
in	inches	* 2.5	centimeters	cm
ft	feet	30	centimeters	cm
yd	yards	0.9	meters	m
mi	miles	1.6	kilometers	km
	AREA			
in^2	square inches	6.5	square centimeters	cm^2
ft^2	square feet	0.09	square meters	m^2
yd^2	square yards	0.8	square meters	m^2
mi^2	square miles	2.6	square kilometers	km^2
	acres	0.4	hectares	ha
	MASS (WEIGHT)			
oz	ounces	28	grams	g
lb	pounds	0.45	kilograms	kg
	short tons (2000 lb)	0.9	tonnes	t
	VOLUME			
tsp	teaspoons	5	milliliters	ml
tbsp	tablespoons	15	milliliters	ml
fl oz	fluid ounces	30	milliliters	ml
c	cups	0.24	liters	l
pt	pints	0.47	liters	l
qt	quarts	0.95	liters	l
gal	gallons	3.8	liters	l
ft^3	cubic feet	0.03	cubic meters	m^3
yd^3	cubic yards	0.76	cubic meters	m^3
	TEMPERATURE (EXACT)			
°F	Fahrenheit temperature	5/9 (after subtracting 32)	Celsius temperature	°C

*1 in = 2.54 (exactly).

Approximate Conversions from Metric Measures

Symbol	When You Know	Multiply By	To Find	Symbol
	LENGTH			
mm	millimeters	0.04	inches	in
cm	centimeters	0.4	inches	in
m	meters	3.3	feet	ft
m	meters	1.1	yards	yd
km	kilometers	0.6	miles	mi
	AREA			
cm^2	square centimeters	0.16	square inches	in^2
m^2	square meters	1.2	square yards	yd^2
km^2	square kilometers	0.4	square miles	mi^2
ha	hectares (10,000 m^2)	2.5	acres	
	MASS (WEIGHT)			
g	grams	0.035	ounces	oz
kg	kilograms	2.2	pounds	lb
t	tonnes (1000 kg)	1.1	short tons	
	VOLUME			
ml	milliliters	0.03	fluid ounces	fl oz
l	liters	0.125	cups	c
l	liters	2.1	pints	pt
l	liters	1.06	quarts	qt
l	liters	0.26	gallons	gal
m^3	cubic meters	35	cubic feet	ft^3
m^3	cubic meters	1.3	cubic yards	yd^3
	TEMPERATURE (EXACT)			
°C	Celsius temperature	9/5 (then add 32)	Fahrenheit temperature	°F

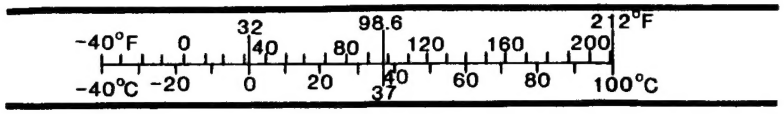

ACKNOWLEDGEMENTS

The author would like to acknowledge the efforts of several people who served in significant capacity on this project. First, Daniel Henderson (CDR, USCG (ret)), formerly of the Systems Technology Division in U.S. Coast Guard Headquarters, initiated the new minor light development effort. The first two Contracting Officer's Technical Representatives on the contract for the U.S. Coast Guard were Miles Milbach (LCDR, USCG (ret)) and Michael Wroblewski (LCDR, USCGR). Significant oversight, review and input on the contract were also provided by Wayne Fisher, Richard Walker, and Robert Stachon of the U.S. Coast Guard Research and Development Center. Engineering oversight was provided by Dr. Lester Merkham and Carl Andersen of the Ocean Engineering Division in U.S. Coast Guard Headquarters. U.S. Coast Guard Headquarters contracting office personnel that provided outstanding support during the contract were Susan Harvey, Barbara Sherrod, Brenda Summers and Todd Wildason.

The author would also like to acknowledge the support of the U.S. Coast Guard Cutter REDWOOD and its Commanding Officer, LT Bill Milne, in conducting field testing of the prototype lamps in the New London, CT area.

FOREWORD

The work documented in this report was performed under a U.S. Coast Guard contract (DTCG23-87-C-20026) titled, ***Research and Development of a Spectrally Selective Aids-to-Navigation Signal Light System***, executed by GTE Corporation's Electrical Products Group (EPG) between the period June, 1987 and July 31, 1993. In January, 1993, GTE Corporation divested the Electrical Products Group to Siemens Corporation, and Siemens merged the EPG North American Lighting Group into a Siemens' subsidiary, the OSRAM Lighting Group. The North American Lighting Group was named OSRAM SYLVANIA Inc., (OSI).

Throughout the contract period the principal activity was conducted at the OSI Engineering Center in Salem, Massachusetts, under the direction of George J. English, Director of the Lighting Systems Laboratory at the Engineering Center. Much of the information contained in this report was prepared and delivered during the execution of the contract by George J. English, Dr. Harold L. Rothwell, Principal Scientist, and Michael C. Bleiweiss, Principal Engineer.

EXECUTIVE SUMMARY

The United States Coast Guard maintains over 16,000 lighted buoys and shore aids in its marine aids-to-navigation (AtoN) system. In an effort to reduce the costs associated with powering and maintaining this service to the mariner, the Coast Guard initiated a development effort in 1987 to identify a new light source to replace the standard tungsten filament lamp with one that improved the efficiency through directly producing the signal light in the color desired. This report documents this developmental effort.

The project examined several alternative lighting technologies. After this initial technology assessment, the project focused on a small gas discharge lamp which utilizes a mercury liquid electrode (LE) and a rare gas buffer of argon (Ar). The LE/Ar lamp discharges emitted light in fairly narrow spectral bands to produce colors with no external filtering and are capable of being flashed at any Coast Guard signal characteristic. The lamp was also configured so that it could be easily retrofitted into any of the Coast Guard's minor AtoN lantern housings and operate on the same standard 12 VDC minor aid power system. Tests conducted on a set of prototype lamps indicated the potential for greater than 35,000 hours of life. The useful life of the current lamp design is limited to approximately 1500 hours due to a degradation in the lumen maintenance that was unable to be fully investigated and corrected prior to termination of the effort. Promising green and white LE/Ar lamps were developed (although the green was slightly outside IALA color recommendations). However, acceptable red and yellow LE/Ar lamps could not be prooduced. The use of an alternative neon (Ne) technology to produce a direct emitting red color was also investigated.

While the goal of developing a single lamp technology capable of providing the signal colors used in the Coast Guard's navigation marking system was never achieved, significant advances were made in evaluating the potential of both LE/Ar and neon technology as direct color emiting, long-life light sources for use on minor AtoN applications.

[Page Intentionally Left Blank]

TABLE OF CONTENTS

CHAPTER PAGE

ACKNOWLEDGEMENTS v

FOREWORD vi

EXECUTIVE SUMMARY vii

LIST OF ABBREVIATIONS, SYMBOLS, AND ACRONYMS xvii

1. INTRODUCTION 1-1

2. USCG MINOR AID LANTERN 2-1

2.1 Tungsten Filament Lamp 2-2
2.2 Lens Filtering 2-2
2.3 Lamp Life 2-4

3. ARC LAMP RESEARCH 3-1

3.1 Metal Vapor Lamps 3-1
3.1.1 Thallium Iodide (TlI) Lamp 3-3
3.1.2 Lithium Iodide (LiI) Lamp 3-3
3.1.3 Cadmium Iodide (CdI) Lamp 3-4
3.1.4 Sodium Iodide (NaI) Lamp 3-4
3.2 Cold Salt Lamps 3-4
3.3 Heated Salts Lamps 3-6
3.4 Amalgam Lamps 3-6
3.5 Mercury Pool Lamps 3-8
3.5.1 Lamp Configuration 3-10
3.5.1.1 Two Pool Lamp 3-10
3.5.1.2 Capillary Pool Lamp 3-11
3.5.1.3 Mercury Pool Electrode with Rare Gas Fill Lamp 3-11
3.5.2 Mercury Pool Lamp Preliminary Tests 3-12
3.5.2.1 Lamp Jacket Fill Tests 3-12
3.5.2.2 Phosphor Coating Evaluation 3-13
3.5.2.3 Mercury Pool Electrode Lamp Under Continuous Operation 3-13

4. RESEARCH SUMMARY 4-1

5. ARC LAMP DEVELOPMENT 5-1

5.1 Lamp Geometry 5-1
5.1.1 General 5-1
5.1.2 Elliptical Cavity 5-2
5.1.3 Linear Double-Bore Cavity 5-2
5.1.4 Linear Quad-Bore Cavity 5-2

CHAPTER PAGE

5.1.5 Helical Single-Bore Cavity 5-3
5.1.6 Circular 5-3
5.2 LE/Ar Lamp Components 5-5
5.2.1 Mercury Pools 5-5
5.2.2 Fill Gas 5-5
5.2.3 Quartz 5-6
5.2.4 Electrodes 5-6
5.2.5 Lamp Seal 5-6
5.2.6 Phosphor Coating 5-7
5.3 COLOR 5-9
5.3.1 Evaluation Techniques 5-9
5.3.2 Color Development Studies 5-10
5.3.2.1 Phosphor Tests 5-10
5.3.2.2 Dyes and Filters 5-10
5.3.3 Green 5-12
5.3.4 White 5-12
5.3.5 Red 5-14
5.3.5.1 Phosphors 5-14
5.3.5.2 Dyes and Filters 5-15
5.3.5.3 Neon Lamps 5-18
5.3.5.3.1 Neon/Mercury Lamps 5-18
5.3.5.3.2 Pure Neon 5-20
5.3.6 Yellow 5-22
5.3.7 Control Devices 5-28
5.3.7.1 Theory 5-28
5.3.7.2 Power Regulation 5-29
5.3.7.2.1 Direct Current (DC) 5-29
5.3.7.2.2 Pulse Modulation 5-30
5.3.7.2.3 Continuous Wave (AC) 5-34
5.3.7.3 Flasher Circuit 5-36
5.3.7.4 Dual Lamp Assembly 5-37
5.3.7.5 Single-Lamp Assembly 5-40

6. LE/AR SYSTEM TESTING AND MEASUREMENT 6-1

6.1 Photometric Equipment and Measurements 6-1
6.1.1 Integrating Sphere Lumens 6-1
6.2 Filter Transmission Measurements 6-2
6.3 Life Testing 6-5
6.3.1 Elliptical Lamp Pulse Durability 6-5
6.3.2 Linear Double-Bore Test 6-6
6.3.3 Helical Coil Lamp Life Tests 6-6
6.3.3.1 Epoxy-Sealed Jacket Test 6-6
6.3.3.2 Unjacketed and Unphosphored Test 6-7
6.3.3.3 Phosphored, Unjacketed Test 6-8
6.3.3.4 Phosphored Gas-Filled Jacket Test 6-8

CHAPTER PAGE

6.3.3.5 Prototype Lamp Reliability Tests 6-10
6.3.3.6 Post-Delivery Coiled LE/Ar Lamp System Life Test 6-12
6.4 Environmental Testing 6-12
6.4.1 Preliminary Temperature Testing 6-12
6.4.1.1 Low Temperature Tests 6-12
6.4.1.2 High Temperature Test 6-13
6.4.2 Formal Testing 6-14
6.4.2.1 Pre-Test Evaluations (Spectrophotometry) 6-15
6.4.2.2 Vibration Testing 6-16
6.4.2.2.1 Vibration Test Description 6-16
6.4.2.2.2 Vibration Test Results 6-17
6.4.2.3 Shock Testing 6-17
6.4.2.3.1 Shock Test Description 6-17
6.4.2.3.2 Shock Test Results 6-18
6.4.2.4 High Temperature Testing 6-18
6.4.2.4.1 High Temperature Test Description 6-18
6.4.2.4.2 High Temperature Test Results 6-19
6.4.2.5 Low Temperature Testing 6-19
6.4.2.5.1 Low Temperature Test Description 6-19
6.4.2.5.2 Low Temperature Test Results 6-19
6.4.2.6 Humidity Testing 6-20
6.4.2.6.1 Humidity Test Description 6-20
6.4.2.6.2 Humidity Test Results 6-21
6.4.2.7 Salt Fog Exposure Testing 6-21
6.4.2.7.1 Salt Fog Exposure Test Description 6-21
6.4.2.7.2 Salt Fog Exposure Test Results 6-21
6.4.2.8 Performance in Beacon 6-22
6.4.2.8.1 Beacon Performance Test Description 6-22
6.4.2.8.2 Beacon Performance Test Results 6-23
6.4.2.9 Flash Capability Test 6-23
6.4.2.9.1 Flash Capability Test Description 6-23
6.4.2.9.2 Flash Capability Test Results 6-27
6.4.2.10 Efficiency Test 6-27
6.4.2.10.1 Efficiency Test Description 6-27
6.4.2.10.2 Efficiency Test Results 6-28
6.4.2.10.3 Spectrophotometry Data of Test Lamps 6-28
6.5 Phosphor Degradation Analysis 6-30
6.6 Field Tests 6-32

7. DELIVERED PROTOTYPE LAMP SUMMARY 7-1

7.1 Coiled LE/Ar Lamp Photometric Data 7-1
7.2 Circular Lamp Photometric Data 7-2

CHAPTER **PAGE**

8. CONCLUSIONS 8-1

8.1 Prototype Lamp Performance Summary 8-1

REFERENCES 8-5

APPENDIX A. *Phase I, Task 2. Final Report*
APPENDIX B. Engineering Drawing Package
APPENDIX C. Lamp Fabrication Process Specification

LIST OF FIGURES

FIGURE		PAGE
2-1.	USCG 155 mm Marine Lantern	2-1
2-2.	Transmission Spectra of USCG Colored Beacon Filters	2-3
3-1.	Metal Vapor Lamp Configuration	3-2
3-2.	Cold Salts Lamp Configuration	3-5
3-3.	Heated Salts Lamp Configuration	3-7
3-4.	Liquid Electrode Fluorescent Lamp Configuration	3-9
3-5.	Twin Pool Liquid Electrode Lamp Configuration	3-10
5-1.	Helical Coil LE/Ar Lamp Configuration	5-4
5-2.	Circular LE/Ar Lamp Configuration	5-4
5-3.	Spectrum of LE/Ar Lamp with 2285 Green Phosphor	5-13
5-4.	Chromaticity Coordinates of LE/Ar Lamp with 2285 Green Phosphor	5-13
5-5.	Spectrum of LE/Ar Lamp with Cool White Phosphor	5-14
5-6.	Chromaticity of LE/Ar Lamp with Red Phosphor Blend and Dyes	5-17
5-7.	Spectrum of LE/Ar Lamp with Red Phosphor Blend and Dyes	5-17
5-8.	Ratio of 640 nm Emission to 703 nm Emission vs. Pressure in Straight Neon Lamp	5-21
5-9.	640 nm Line Emission vs. Fill Gas Pressure in Straight Neon Lamp	5-21
5-10.	Chromaticity Coordinates of Several Neon Lamps	5-23
5-11.	Spectrum of Helical Coil Neon Lamp	5-23
5-12.	Chromaticity Coordinates of a Coiled Neon Lamp	5-24
5-13.	Chromaticity Coordinates of the Yellow and Blue Phosphor Combinations	5-25
5-14.	Chromaticity Coordinates of the Yellow and Red Phosphor Combinations	5-27
5-15.	Spectrum of a LE/Ar Lamp with Red Phosphor Blend and a Yellow Jacket	5-27
5-16.	Pulse Modulation Wave Form	5-31

FIGURE PAGE

5-17. Ultraviolet Emission vs. Time of an LE/Ar Lamp Flash 5-31
5-18. Intensity vs. Input Power of an LE/Ar Lamp for Various Pulse Modulation Schemes 5-33
5-19. Intensity vs. Input Power of an LE/Ar Lamp for AC and DC Operation 5-33
5-20. Twin LE/Ar Lamp System Design 5-38
6-1. Efficacy vs. Age for LE/Ar Lamps with Phosphor in Epoxied Jackets 6-7
6-2. Efficacy vs. Age of LE/Ar Lamps Without Phosphor 6-8
6-3. Lumen Output vs. Age for Reduced Mercury LE/Ar Lamps with 2285 Green Phosphor Without Outer Jacket 6-9
6-4. Horizontal Luminous Intensity Profile of Lamp S/N G012 6-13
6-5. Vertical Luminous Intensity Profile of Lamp G012 6-13
6-6. Horizontal Luminous Intensity Profile of Lamp S/N G027 6-14
6-7. Vertical Luminous Intensity Profile of Lamp G027 6-14
6-8. Horizontal Luminous Intensity Profile of Lamp S/N G030 6-15
6-9. Vertical Luminous Intensity Profile of Lamp G030 6-15
8-1. Exploded View of LE/Ar Lamp and Power Supply Assembly 8-4

LIST OF TABLES

TABLE		PAGE
2-1.	USCG 155 MM LANTERN COLOR COORDINATES	2-3
5-1.	PHOSPHORS EVALUATED FOR USE WITH THE LE/AR LAMPS	5-11
5-2.	COLORIMETRY OF THE LE/AR LAMP WITH RED PHOSPHOR BLEND AND RED DYE.	5-16
5-3.	PRESSURE EFFECTS ON EFFICACY IN TUBULAR LE/NE LAMP	5-19
5-4.	PRESSURE EFFECTS ON EFFICACY IN ELLIPTICAL LE/NE LAMP	5-19
5-5.	PHOTOMETRY DATA FOR THE HIGH-PRESSURE PURE NEON LAMPS	5-20
5-6.	COLOR DATA FOR THE 2511 YELLOW PHOSPHOR COMBINATIONS	5-25
5-7.	COLOR DATA FOR 2342 RED & 4340 YELLOW PHOSPHORS	5-26
5-8.	SUMMARY OF TOTAL INPUT CURRENT DRAW FOR LE/AR BEACON POWER SUPPLY	5-35
5-9.	LE/AR LAMP POWER SUPPLY FLASH CHARACTERISTICS	5-36
6-1.	SUMMARY OF PHOTOMETRIC PERFORMANCE OF STANDARD USCG LAMPS	6-2
6-2.	ABSOLUTE AND LUMINOUS TRANSMISSIONS OF THE BEACON FILTERS	6-3
6-3.	TRANSMISSIONS OF BEACON FILTERS RELATIVE TO THE CLEAR LENS	6-4
6-4.	SINGLE-PASS LE/AR LAMP LIFE TEST RESULTS	6-5
6-5.	DOUBLE-PASS LE/AR LAMP LIFE TEST RESULTS	6-6
6-6.	LAMP RELIABILITY TEST SUMMARY	6-10
6-7.	RELIABILITY TEST PHOTOMETRY DATA	6-11
6-8.	SUMMARY OF LE/AR LAMP FLASH CAPABILITY TEST	6-27
6-9.	SUMMARY OF LE/AR EFFICIENCY TEST	6-28
6-10.	SUMMARY OF TEST LAMP SPECTROPHOTOMETRY DATA	6-29

TABLE PAGE

7-1. DELIVERED PROTOTYPE LAMP PHOTOMETRIC DATA..... 7-1

7-2. PHOTOMETRIC DATA ON SECOND LE/AR LAMP SET 7-2

7-3. PHOTOMETRIC DATA ON THIRD LE/AR LAMP SET..... 7-2

7-4. PHOTOMETRIC DATA ON THE LE/AR CIRCULAR LAMPS..... 7-3

8-1. PHYSICAL PARAMETERS OF COILED AND CIRCULAR LAMPS 8-2

8-2. OUTPUT CHARACTERISTICS OF SELECTED LAMPS..... 8-3

LIST OF ABBREVIATIONS, SYMBOLS, AND ACRONYMS

A	- amperes
AC	- alternating current
cd	- candela
cm	- centimeter
DC	- direct current
ft	- foot
eV	- electron Volt
fc	- foot candle
g	- gravities (acceleration in ft/sec^2)
Hz	- Hertz - cycles per second
IALA	- International Association of Lighthouse Authorities
I.D.	- Inner Diameter
JND	- Just Noticeable Difference
kHz	- Hertz x 10^3 (kilohertz)
LE	- Liquid Electrode
LE/Ar	- Liquid Electrode with Argon fill gas
LE/Ne	- Liquid Electrode with Neon fill gas
lpw	- lumens per watt
m	- meter
MHI	- Mean Horizontal Intensity
mm	- millimeter
nm	- nanometer
NMLS	- New Minor Light System
O.D.	- Outer Diameter
spd	- spectral power distribution
USCG	- United States Coast Guard
UV	- ultraviolet
V	- Volts
W	- Watts
µsec	- microsecond
'	- foot
"	- inch
°	- degree

1. INTRODUCTION

At the outset of this development effort, the U.S. Coast Guard estimated that it was spending about $2 million/year to power some 14,000 lighted, fixed and floating marine markers (buoys, daybeacons) in its short-range aids-to-navigation (AtoN) system. The cost was heavily due to the fact that, up until about 1989, the Coast Guard used primary batteries (12 VDC lead-acid) to power the lighted, minor aids to navigation. From 1987 - 1989, the Coast Guard began an aggressive solarization project that replaced primary batteries with photovoltaic (PV) panel and a secondary battery, thus eliminating the need to replace batteries every year. However, the number of lighted minor AtoN has increased from 14,000 to over 16,000 and the cost of performing other routine maintenance, such as annual relamping, continues to result in significant costs in terms of service personnel and platforms.

The short-range AtoN system is defined as the navigation signals external to a vessel that are within visual range of the vessel. The signals are classified in several categories, minor, major, and directional and range lights. The light sources developed under this effort fell under the category of minor AtoN. Minor AtoN signals provide, in general, a signal that can be seen at a range up to about eight miles under nominal visibility conditions. The Coast Guard primarily uses a tungsten-filamented, incandescent marine lamp on most all of its minor AtoN beacons. The lighting system was essentially similar to that used since AtoNs were electrified in the 1960's.

The original goals of the project work were to develop new marine signal lights incorporating new and current technology in light sources, optics, electronics, and material. The new lights were intended to meet the following minimum standards:

- Have all the operational capabilities of the existing 155, 250, and 300 mm (twice the drum lens focal length, or diameter at the focal plane) lights and their associated electronics circuitry.

- Have increased efficacy (more lumens per watt input) over the present 12 VDC minor aid system (7% direct emitting vice 3% white light production).

- Incorporate new technology such that the number of hardware components is decreased, reliability is increased and maintenance is simplified.

- Be compatible with the present 12 VDC minor aid system, including but not limited to the solar energy conversion.

The work performed in this development effort was accomplished under several phases. The first phase was centered on a technology survey, literature search and testing of many potential candidate lighting technologies. The report submitted at the conclusion of the first phase of this effort is included as Appendix A.

The second phase of the project required the construction of prototype navigational lights equipment, measurement of system performance, and subjecting the prototype lamps to a battery of environmental and shock/vibration tests. The third phase of the project was to produce a final report, an engineering design specification and reprocurement package for the new generation of minor AtoN light signal hardware. The engineering design drawings and lamp fabrication process specification are included in this report as Appendices B and C.

Following completion of the contractual development and delivery of the prototype lamp systems, lamps were placed on laboratory life tests and field installation tests.

2. USCG MINOR AID LANTERN

In the 1960's, the U.S. Coast Guard replaced acetylene gas-lamped buoys with a 12 VDC tungsten-filament lamp mounted in a drum Fresnel lens, that filters the light into the color desired, typically red, green, yellow or white (clear). A majority of the Fresnel-lens lanterns used on the Coast Guard's minor aids to navigation is of the 155 mm-type, which signifies twice the focal length of the lantern. Figure 2-1 is a graphic representation of the lantern.

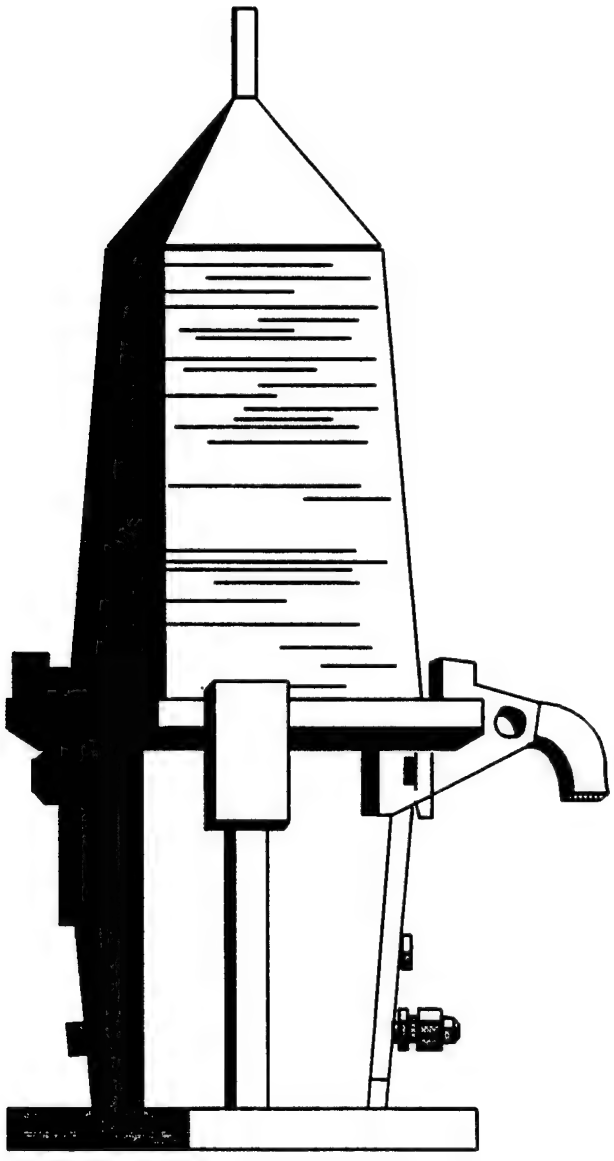

Figure 2-1. USCG 155 mm Marine Lantern

2.1 Tungsten Filament Lamp

Tungsten filament lamps transform electrical energy to radiant and thermal energies. The lamp is relatively inefficient in producing visible light, as only 2.3% of the energy from the power source is converted to visible light. The light is a combination of many different wavelengths (i.e. different colors) and is seen as white light at normal lamp operating temperatures. The marine incandescent lamp filament is oriented vertically and is positioned precisely at the focal point of the Fresnel drum lens when mounted in a top-positioned socket in the Coast Guard's standard six-place lampchanger.

The tungsten lamp filament becomes brittle with age, and therefore is susceptible to failure following shock and vibration.

The lamps used by the U.S. Coast Guard in the minor aids to navigation are designed to operate at 12 VDC, and are rated in terms of their current draw (amps, A) at that voltage. The sizes used are 0.25 A, 0.55 A, 0.77 A, 1.05 A, and 2.05 A.

2.2 Lens Filtering

If colored light is desired, a colored lens is used that effectively blocks colors other than the desired color. Measurements conducted by the U.S. Coast Guard's Research and Development Center have determined that the red and green filters allow less than 30 percent of the incandescent light energy to pass in order to create the intended color signal. Thus, the colored light emitted by the minor aid-to-navigation lantern is effectively only 0.7% of the energy delivered from the energy source. Yellow-filtered lenses are more efficient, producing 2% of the input energy as a light signal.

The Coast Guard's short-range AtoN signals provide colors conforming to the recommendations of the International Association of Lighthouse Authorities (IALA) (reference 1). The U.S. Coast Guard Research and Development Center has measured colorimetry data (reference 2) on the 155 mm lantern colored signals of the minor AtoN lights in units set forth by the International Commission on Illumination (CIE) and have produced the following results:

TABLE 2-1. USCG 155 MM LANTERN COLOR COORDINATES

	CIE Chromaticity Coordinates	
	x	y
Red	0.68	0.33
Green	0.21	0.50
Yellow	0.59	0.42
White	0.43	0.42

The transmission spectra of the USCG marine lantern lens filters are shown below in Figure 2-2.

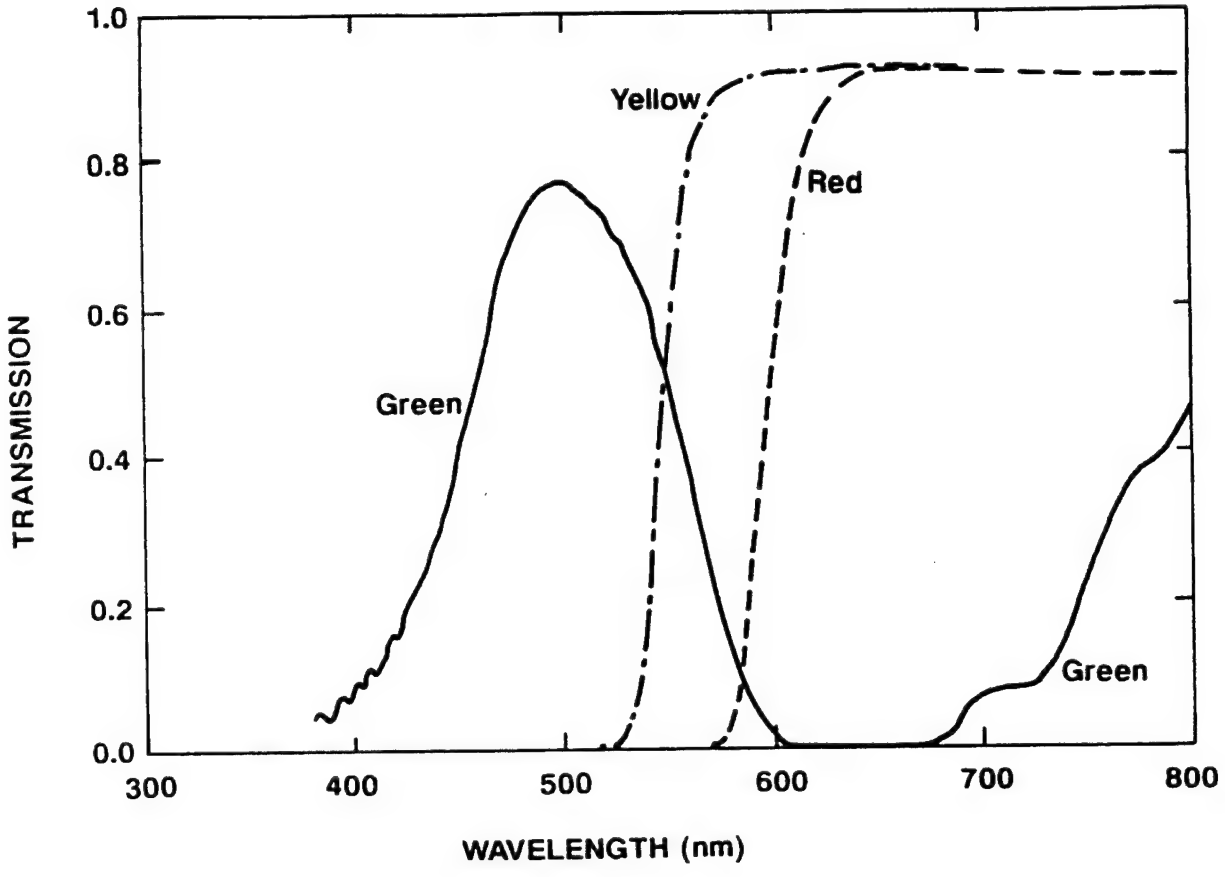

Figure 2-2. Transmission Spectra of USCG Colored Beacon Filters

2.3 Lamp Life

Lamp life tests conducted at the Coast Guard's Research and Development Center in Groton, CT have established that the minor AtoN signal lamps are capable of providing between 500 to 600 hours of service life. The service interval of the minor AtoN lanterns is extended through the use of a six-place lampchanger which automatically rotates a new lamp to the lens focal point when the operating lamp fails by filament breakage.

3. ARC LAMP RESEARCH

This phase of the project involved two parts, a computerized literature search and an investigation of various arc lamp systems. The efforts conducted in this phase were documented in the Final Report, included as Appendix A to this report, and are summarized within this chapter.

The following discharge technologies were evaluated during the lamp research phase of the project.

Metal Vapor	Mercury Pool Lamps:	With Rare Gas Fill
Cold Salts		Double Mercury Pool
Heated Salts		Capillary Pool
Amalgams		

3.1 Metal Vapor Lamps

In the metal vapor lamps, the metal-iodide was put inside a lamp, and the lamp capsule was heated to raise the vapor pressure of the salt high enough to easily sustain an arc. The lamp configuration is as shown on the next page in Figure 3-1.

Several fills were considered on the metal vapor lamps to produce the following desired colors:

Thallium Iodide (Green)	Lithium Iodide (Red)
Sodium Iodide (Yellow)	Cadmium Iodide (Blue)

The double-ended capsules in the lamps were made of fused silica. The electrodes were tungsten, and were balled on the end. The inter-electrode gap was 5 to 8 mm and the volume of each capsule was 0.5 to 1.0 cm^3. Each lamp contained 10 mg of each type of salt. In all cases, this assured that an excess of the metal halide was present. Unless noted otherwise, each lamp contained 100 to 150 torr of argon.

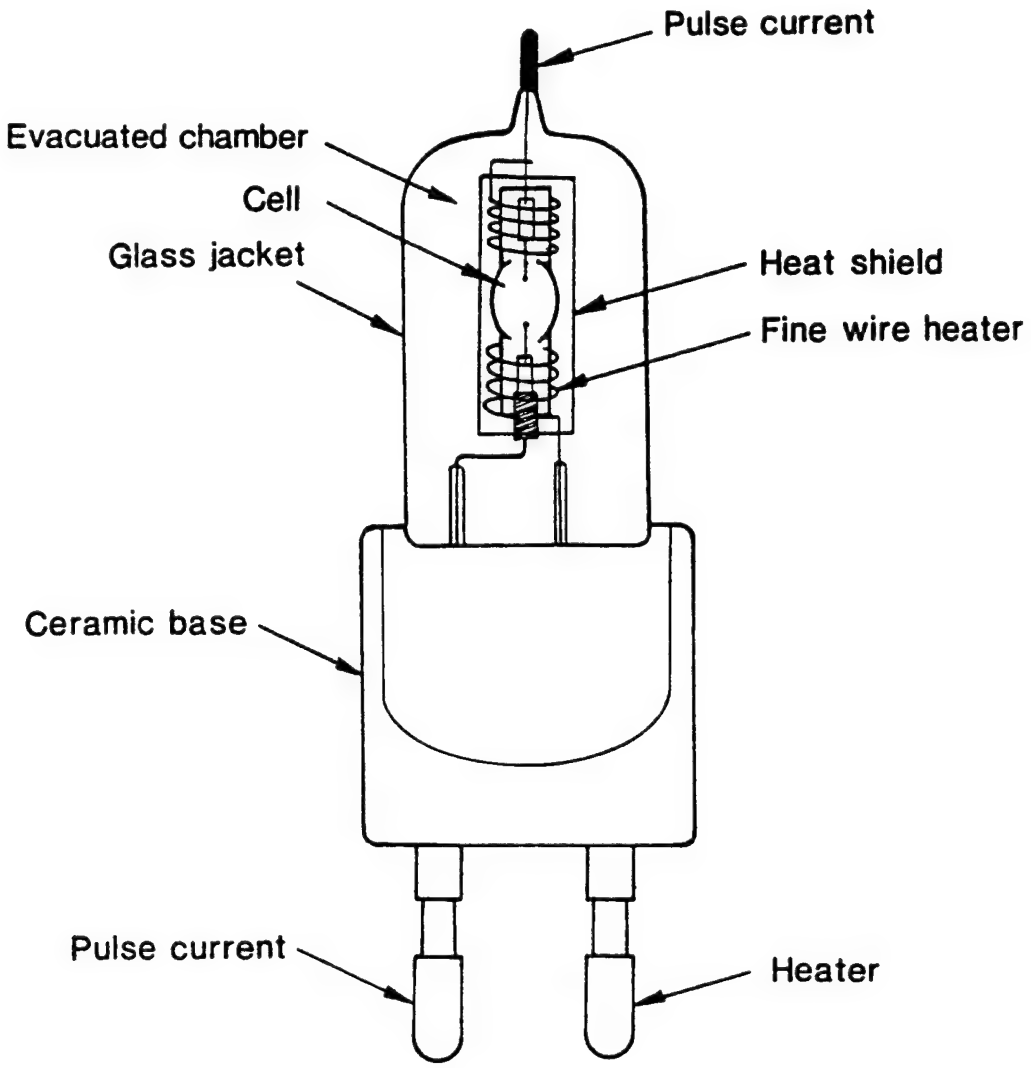

Figure 3-1. Metal Vapor Lamp Configuration

Specifics on the test setup, data gathered, and lamp performance are documented in greater detail in Appendix 1. The summary performance of the individual salts evaluated in the lamp are provided in the following subsections.

3.1.1 Thallium Iodide (TlI) Lamp

Thallium iodide was studied more extensively than the other lamp fills because it had a relatively high vapor pressure at moderate temperatures (1 torr at 450° C). Higher number densities could be achieved with the TlI salt than possible with the other salts. The lamp emitted a green light when pulsed, and at long pulse widths it was fairly bright. However, total efficiencies for the lamp were only on the order of a few tenths of a percent.

Thallium iodide capsules with 100-150 torr of argon and no argon in the fill were evaluated. No noticeable difference in the efficiency (within the experimental error) was detectable between the two fills.

3.1.2 Lithium Iodide (LiI) Lamp

Lamps with a lithium fill emitted a scarlet red light. Although the vapor pressure of LiI was low compared to that of TlI, the LiI lamp was more efficient (on the order of 2%) than the TlI lamp at the same temperature.

The LiI lamp was very sensitive to the amount of time the lamp was allowed to sit idle before pulsing it. When the lamp was pulsed at 1 Hz for 2 minutes before taking data, the efficiency was 0.1%. After being allowed to operate for 3 to 5 minutes before taking data, the efficiency increased to 2% .

During the research, the research team noted that pulse width seemed to contribute significantly to the color produced and overall arc performance. Temperature also contributed to the performance, and the study found that as the temperature increased, the arc had sharper edges and was better defined for a given pulse width. It also became more

difficult to establish the arc as the temperature increased. This was attributed to the increased number density at higher temperatures.

3.1.3 Cadmium Iodide (CdI) Lamp

For pulse widths above approximately 1 ms, the cadmium iodide's discharge was diffuse and had a light blue color to it. Since the efficiency was below 0.5% for the pressure region up to several torr, the research was discontinued on this lamp.

3.1.4 Sodium Iodide (NaI) Lamp

Sodium Iodide is fairly similar to lithium iodide since both are alkali metals. Peak efficiencies of 1-2% were achieved for vapor pressures of a few tenths of a torr. Pressures of several torr were not easy to achieve due to the low vapor pressure of sodium iodide.

3.2 Cold Salt Lamps

A cold salt lamp consists of a metal-iodide salt at the bottom of an arc tube covering the tungsten electrode. The electrons flow from the top electrode and sputter the salt into the vapor phase where it ionizes and forms the plasma; which radiates at the characteristic wavelengths of the metal. The lamp configuration is shown in Figure 3-2.

The following salts (and radiated colors) were investigated:

Sodium Iodide (Yellow)
Lithium Iodide (Red)
Lithium Bromide (Red)

Both the lithium and sodium iodide exhibited a peak efficiency of approximately 4% in the color bands, and averaged efficiencies over the pulse width of 2 to 4%. However, it was noted early in the research that the cold salt lamps were somewhat unstable and difficult to pulse reliably. The lamps misfired approximately 25% of the time. The problem was attributed to the formation of a constrained arc terminating into the set and sputtered "holes" in the cold salt surface. The tests were performed at 30 to 40 watts, and it was

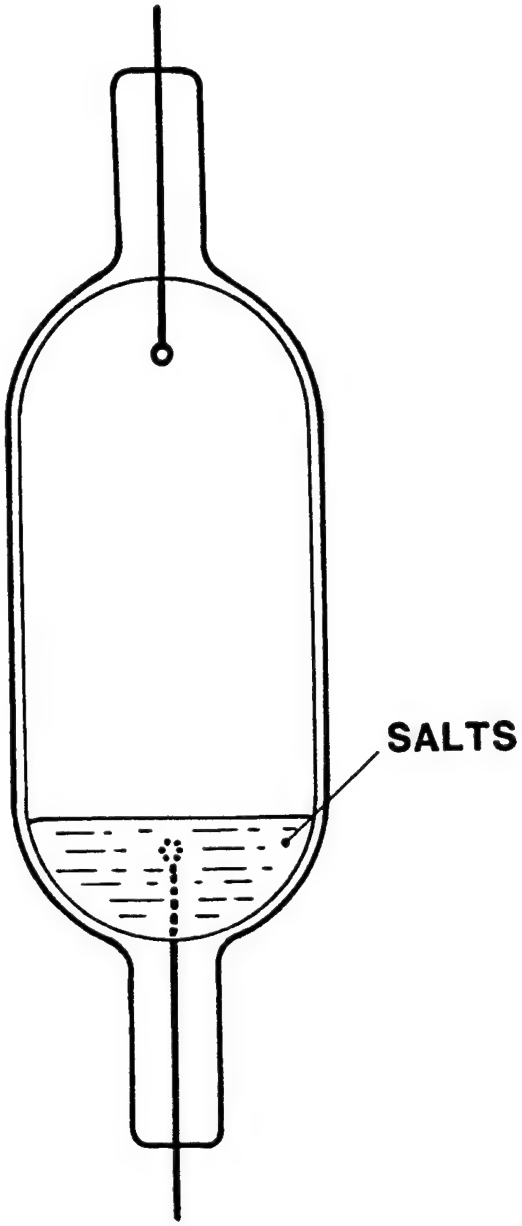

Figure 3-2. Cold Salts Lamp Configuration

expected that the probability of arc formation was higher than it would have been at lower power levels. For that reason the research was discontinued on the cold salt lamp.

3.3 Heated Salts Lamps

The metal vapor lamps were considered to have an advantage over the cold salts lamps as the arc was easier to form when the radiating metals were already in the gas phase. However, the metal vapor lamps required a bulky heater apparatus around the lamp. The cold salts lamps were simpler, but they were harder to pulse and the salts at the bottom of the lamp had a tendency to erode over time due to sputtering. In order to take advantage of both designs, the research team constructed lamps containing halide salts and a heater filament inside the capsule, imbedded in the salts. The filament would heat and melt the salts, increasing their vapor pressure and forming a liquid pool that would "heal" after each pulse. A schematic of the source design is shown in Figure 3-3.

The research team constructed lamps containing thallium-iodide (green) and sodium-iodide (yellow). When the lamps were heated to their melting point, the lamps pulsed strongly in the color characteristic of the metal. However, to get adequate heating, the filament had to be run at near-incandescent temperatures; which caused a very short life when imbedded in the metal halide salt.

Although the heated salts lamp technology was considered promising, the research team did not believe it could be adequately developed within the term of the contract.

3.4 Amalgam Lamps

In amalgam lamps, the color-characteristic metal was dissolved in mercury. In general, the solutions were saturated; that is, more metal is added than can go into solution in the mercury. Once the lamps were energized, the emission spectra were analyzed to determine if the characteristic emission from the additive metal appeared in addition to the mercury lines.

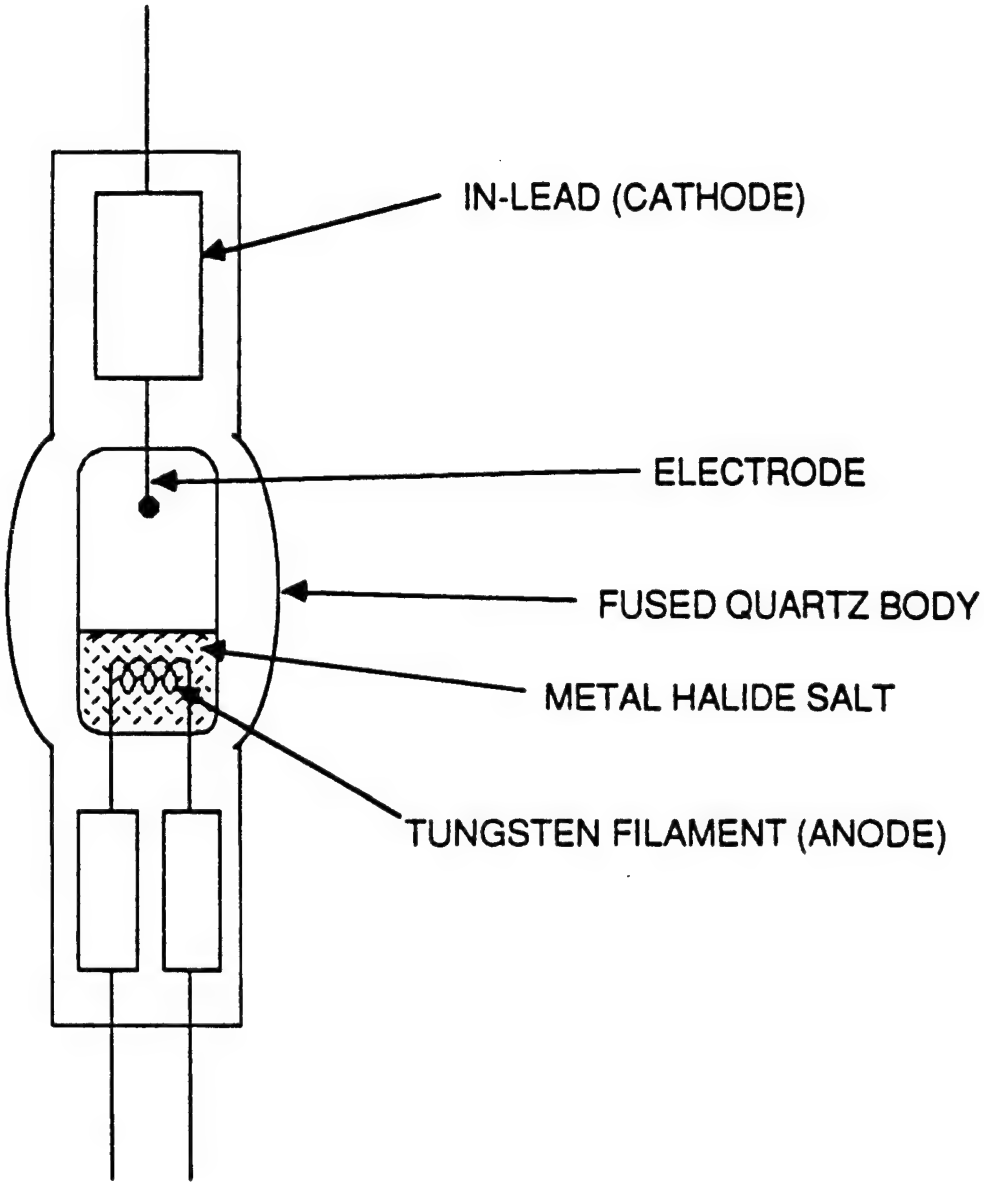

Figure 3-3. Heated Salts Lamp Configuration

Amalgams studied were: Sodium-Mercury (NaHg)
Zinc-Mercury (ZnHg)
Thallium-Mercury (TlHg)

In general, when the lamps were pulsed, the metal tended to come out of solution and coat the walls of the capsule. Several NaHg lamps were made with excess mercury to minimize the problem. The lamps of that design ran much longer before the sodium coated-out, however the lamp ran for only a few dozen pulses.

The amalgam lamps were not considered promising for the purposes of the study, and the research was discontinued in that direction.

3.5 Mercury Pool Lamps

The mercury pool lamp consists of a pool of mercury sitting on the bottom of the capsule which acts as the cathode. The lamp's principle of operation is that the electric discharge sputters some of the mercury in the pool into the vapor phase, where it then ionizes and forms the radiating plasma. The electrons flow up through the mercury pool, into the plasma and up to the top electrode, which is the anode. At the end of the pulse, the mercury recondenses and drops back into the pool, so that the liquid electrode is never depleted (and never wears out).

The mercury pool lamp is a very inefficient radiator of visible light, with about 90% of its emission in the ultraviolet (UV). The emitted visible radiation is in the blue and green, at wavelengths not useful for signal beacons. The mercury lamp must be coated with phosphors capable of converting the 254 nm UV emission into visible light. Several phosphor types are available to convert the UV into many different colors.

A general arrangement drawing of the mercury pool lamp is shown in Figure 3-4. The lamp configuration, excitation, and phosphor coat schemes were all investigated in detail during the research and further pursued in the development phase of the project. The results of each area of study are summarized in the following subsections.

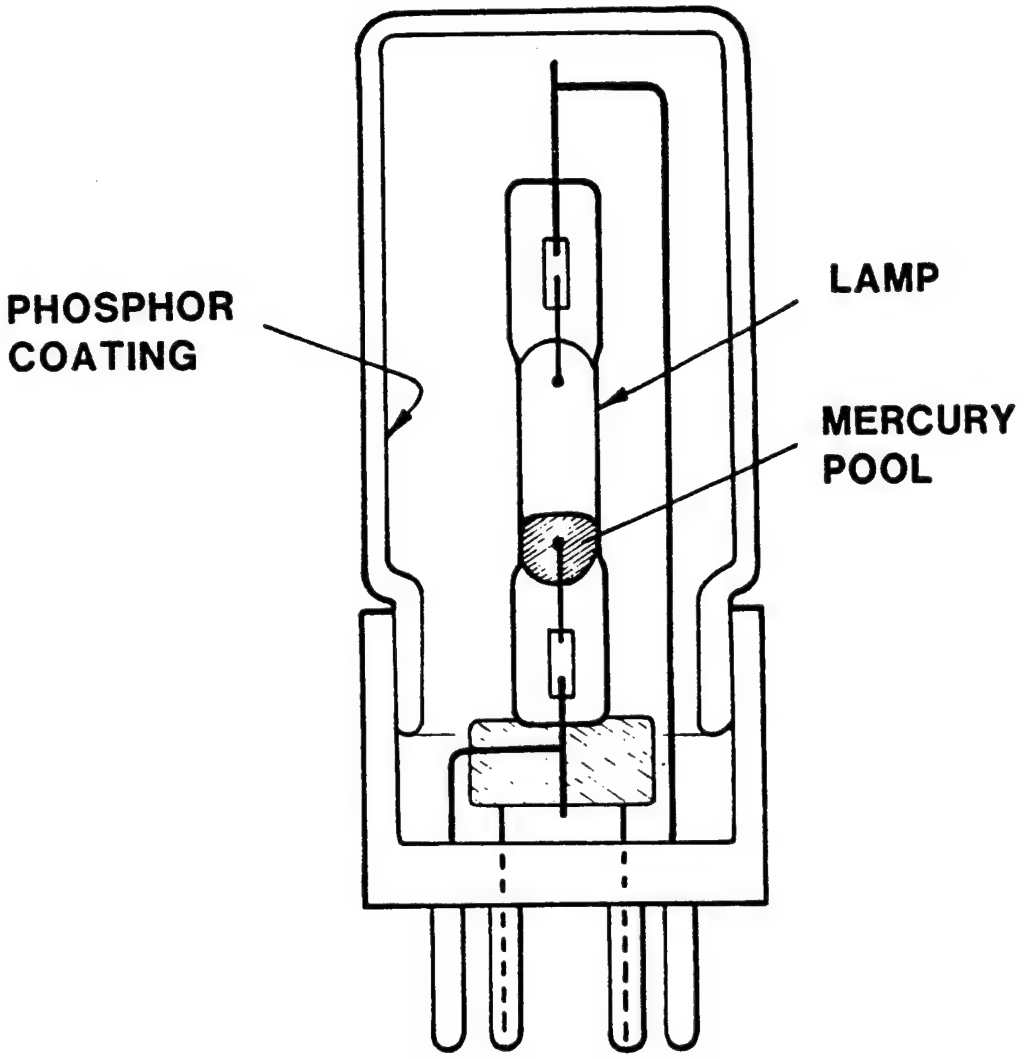

Figure 3-4. Liquid Electrode Fluorescent Lamp Configuration

3.5.1 Lamp Configuration

3.5.1.1 Two Pool Lamp

A longer arc was needed to increase the radiating area of the phosphor. A lamp was made in which the arc was "folded over" in the lamp by having two pools of mercury separated by a barrier. However, it was recognized that if the vertical extent of the arc was too great, then it would not couple efficiently to the beacon optic. This design is shown in Figure 3-5.

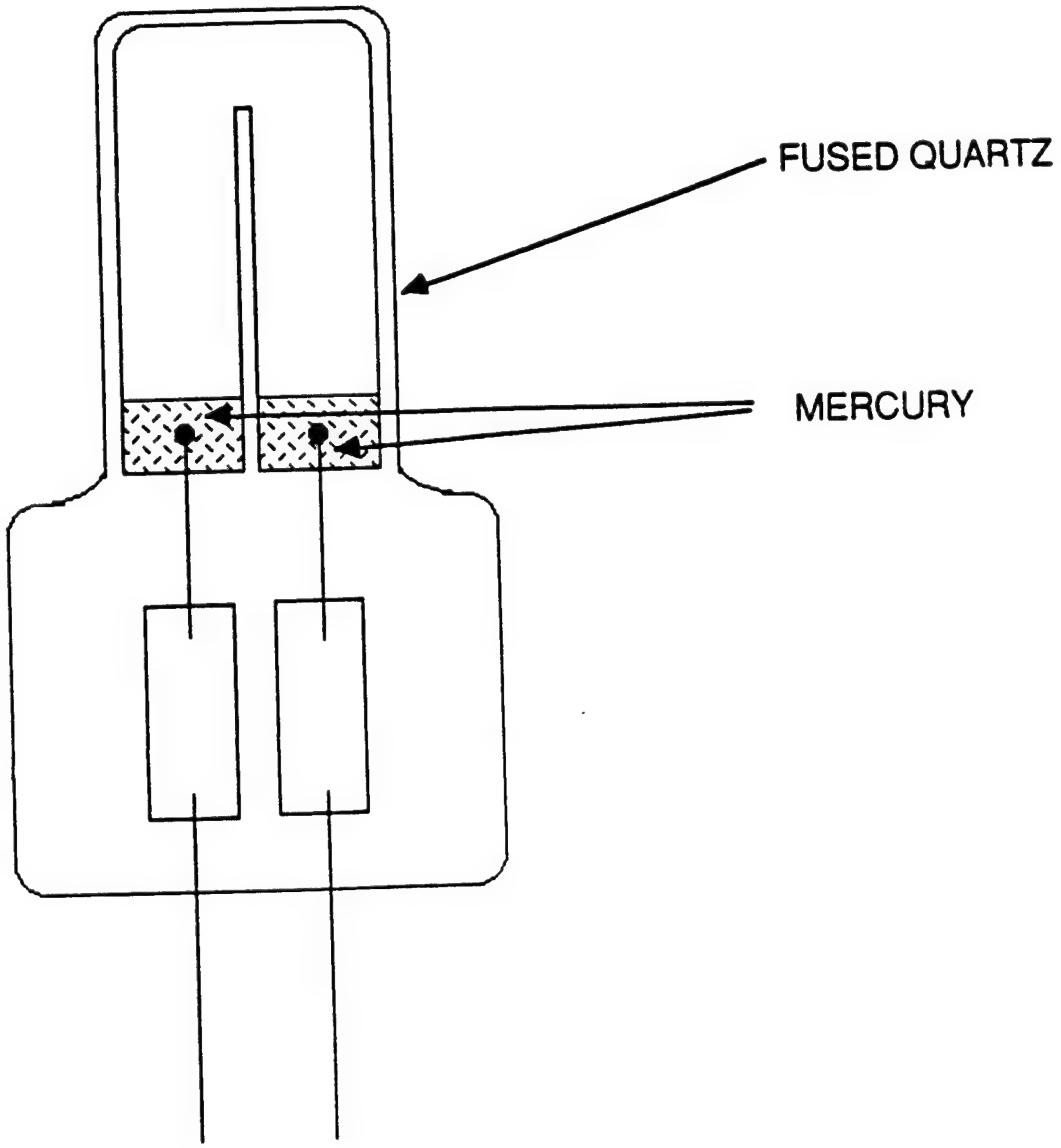

Figure 3-5. Twin Pool Liquid Electrode Lamp Configuration

Because of the extremely long arc length, the lamp was difficult to pulse. Also, the press seal had a tendency to break. Due to the extremely difficulties experienced in fabricating the lamps, efforts to perfect the design during the research portion of the contract were limited.

3.5.1.2 Capillary Pool Lamp

The results of the beacon intensity testing indicated that a narrower source would couple more efficiently with the Fresnel lens optic. Therefore the research team proceeded on designing an extremely thin, capillary lamp with a small pool of mercury at the bottom. This design was considered more desirable as it required much less mercury.

However, the small amount of mercury caused surface tension effects to dominate. This resulted in the mercury tending to form into a ball. When the lamp was pulsed, the arc propagated around the ball of mercury to the base of the in-lead electrode, preventing enough of the mercury from vaporizing to form a good arc. Nonetheless, this approach was considered very promising. The team envisioned that widening the tube would allow the mercury to completely wet the bottom of the lamp, thus providing the desired characteristics. However, the refinement of the capillary lamp design was pursued in the development phase of the project.

3.5.1.3 Mercury Pool Electrode with Rare Gas Fill Lamp

To enhance the emission in the color of interest, a rare gas was added to the liquid electrode lamps. The radiation from the gas reinforces the emission from the phosphor. In order to increase the red emission, a liquid electrode lamp was fabricated using neon for the fill gas instead of the usual argon.

Research into the use of the neon gas and the mercury pool electrode produced interesting results towards the production of red light emission. Tests indicated that exciting the mercury UV emission with a train of 100 μsec pulses at a 10% duty cycle to provide an

overall pulse width of 500 msec resulted in no stress on the lamp during the pulse train as the time between pulses was less than the relaxation time of the plasma in the lamp.

In addition, further tests on the neon/mercury system indicated that the neon emitted at a low level for about 60 milliseconds, however rose over the rest of the pulse until the input power was terminated. The emission exhibited an afterglow as it decayed exponentially with a decay time at about 40 milliseconds. Because of the afterglow, operating the lamp in a rapid pulse mode resulted in a bright neon emission. This mode of operation was characterized by a high voltage and low current, indicating that the arc was failing to develop and the lamp remained in the glow mode. It was concluded that the mercury did not have a chance to ionize strongly enough to form an arc, so that more of the energy went into exciting the neon.

Intensity measurements of the lamp in a USCG 250 mm lantern showed that the neon/mercury lamp at 0.09 watts input power could produce 63% of the light output of the red-filtered 0.25 A (3 watt) tungsten filament lamp.

3.5.2 Mercury Pool Lamp Preliminary Tests

3.5.2.1 Lamp Jacket Fill Tests

In order to determine if the air was blocking the short wavelength ultraviolet radiation from the liquid electrode lamps that could be providing additional stimulation to the phosphors, capsules were mounted inside phosphor coated jackets that were then evacuated. Line-of-sight spectral power distributions (SPD) were taken using the Jerrell-Ash Monospec 27 0.3 m monochromator. The vacuum inside the jacket was broken and the SPD's repeated. The emission of the air-filled jacket was higher than the evacuated jacket. The research team concluded that air inside the jacket would lend increased conductive and convective cooling of the capsule, thereby lowering its temperature; which, in turn could have lowered the vapor pressure of the mercury, increasing the proportion of UV emission compared to visible. The data imply that this effect overpowered any possible absorption of the short-wave UV by the air.

3.5.2.2 Phosphor Coating Evaluation

During the research, several phosphors and phosphor combinations were evaluated for both intensity and color chromaticity. The findings are tabulated in Table B3 (page 46) of Appendix A. The phosphor reference numbers indicate GTE Sylvania designations for phosphor compounds. Table B1 (page 44) of Appendix A lists most of the chemical compositions for the listed phosphor codes.

RED. The best red emission appeared to come from the combinations of the 2340 (Y_2O_3:Eu) + 2364 (Germanate) phosphors, the 2340 + 2390 (YVO_4:Eu) phosphors and the 2340 phosphor alone. Although the Dayglo paint utilized the blue and green visible emission from the mercury spectrum, it seemed to absorb about the same amount of red light as it emitted; so there was no apparent net gain. Although the 4381 ($CA_5F(PO_4)_3$:Sb:Mn) phosphor had the second highest emission when used with the red beacon filter, it was a yellow phosphor and the chromaticity coordinates are far away from the values recommended by the IALA (reference 1).

GREEN. The best green emission was produced by the 2285, 2293 and 4381 phosphors. The chromaticity of the green light produced with the 2285 on the mercury pool lamp fell within the general region recommended by reference 1, but failed to satisfy the requirements of the preferred region. It was still deemed sutiable for further evaluation.

YELLOW. None of the yellow phosphors tested had an acceptable yellow color. Instead, two red phosphors 2340 and 2364 produced the best yellow emission. The yellow phosphors tended to give a canary yellow color when viewed through the yellow beacon filter, while the required color was a deep amber.

3.5.2.3 Mercury Pool Electrode Lamp Under Continuous Operation

When run in the rapid pulse mode described in Section 3.5.1.3, the researchers concluded that the mercury pool electrode lamp and its variations could be run with any arbitrary pulse characteristic since the pulse duration is made-up by stringing together the requisite number of 10 microsecond pulses. Because of the low duty cycle (10%), the lamp did not

heat-up appreciably. The study therefore concluded that the lamp was capable of being pulsed indefinitely to make it appear to be running continuously.

4. RESEARCH SUMMARY

During the contract period, the Lighting Systems Group of GTE fabricated and evaluated hundreds of discharge sources. The research team investigated nearly a dozen distinct approaches, each requiring custom construction. While many of the sources considered exhibited unique and interesting properties which could be exploited for color source signal applications, no single source was found to meet all of the initial objectives set forth in the contract. It was discovered, however, that some of the sources were competitive with tungsten and provided overall improved performance.

Despite its limitations, the research team proposed the mercury-pool liquid electrode lamp as the most versatile source. When operated in a pulse-modulation mode, this lamp produced 6 times the intensity in certain color bands as tungsten at low wattage (e.g., 3 watts). Although the liquid electrode lamp could not couple efficiently with the present Coast Guard beacon optics, the best total system efficiency tests indicated that a 1 watt average power liquid electrode lamp in the 250 mm optic could match the performance of the 3 watt tungsten source in the same optic. When life, reliability, and source ruggedness were considered, the liquid electrode lamp system was deemed superior to and was expected to out-perform the tungsten sources. As the original lamp geometry evaluated was a rather short arc elliptical source, the researchers proposed to narrow the lamp while extending its arc length in order to improve its lumen output and optical coupling.

The research team determined conventional metal halide lamps to offer significant promise as an energy-efficient light source if operated continuously. Unfortunately, the lowest wattage halide lamp available during the study was 30 watts. The possibility of efficient operation of metal halide discharge lamps at powers as low as 1 watt was considered remote. However, the research indicated that operating the liquid electrode lamp could be operated continuously in pulse modulation mode at 1 watt. Thus, the research team believed that the liquid electrode lamp, at low wattages, held the most promise in providing a source that would meet all operational and flash requirements.

[Page Intentionally Left Blank]

5. ARC LAMP DEVELOPMENT

As stated in the preceding chapter, the lamp research team concluded that the most promising technology capable of direct color emission and long-life was a phosphor-coated mercury discharge lamp employing a unique liquid electrode (LE) with a rare gas buffer of argon (Ar). For low pressure mercury discharges, the light output and source size are nearly directly related, i.e., the larger the source the higher the output without sacrificing efficiency. However, increasing the size of the LE/Ar lamp decreased the optical coupling efficiency. This trade-off was inevitable and compromises were needed in source power and size to match existing tungsten lamp performance as closely as practical. To minimize the emitting source size and improve emission, the researchers chose to coat the phosphor directly onto the lamp.

Based on a review of the work accomplished in the research phase, a major effort was still needed to provide a discharge lamp that could emit in red as effectively as the green system. Although both systems use the same LE/Ar source to produce ultraviolet light, the differences in the efficiency of the phosphors and interference from the visible spectra of the mercury emission made the job considerably harder for red.

5.1 Lamp Geometry

5.1.1 General

Attempts to optimize light output of the liquid electrode, argon-filled (LE/Ar) source and optical coupling of the source to the drum Fresnel lens involved the fabrication of lamps of several different geometries. Despite being a much more efficient than a tungsten filament lamp, the LE/Ar/Phosphor system was very limited in overall luminance (i.e., brightness) compared to tungsten. The emitting surface area had to be much greater than the tungsten lamp filament to give the same output. The larger source size, however, directly affected the optical properties in the beacon. A compromise had to be made between total light

output and source size to achieve reasonable mean horizontal intensity (MHI) and beam divergence.

5.1.2 Elliptical Cavity

The lamp evaluated during Phase I of the project featured an elliptical geometry, and a mercury-covered electrode source with a short arc length. Its flash performance was excellent, achieving many millions of pulses with very little deterioration, but it had low light output due to the extremely short arc length. To improve the light output, the elliptical lamp design was abandoned and other geometries were evaluated, including a linear double-bore cavity, a quad-bore cavity, and a helical single bore cavity.

5.1.3 Linear Double-Bore Cavity

The arc length was increased by making an LE/Ar lamp out of 6 mm O.D., double-bore quartz tubing. The initial lamps were approximately 2" in length; the discharge length was approximately double. A green phosphor-coated glass tube was then placed over the source. When operated with a 60 Hz AC power supply at an operating power of only 1.2W, the lamp, fitted into the 155 mm diameter beacon, yielded a vertical beam spread of approximately 17° and had a MHI of 8 candela at a distance of 25 feet. This indicated that the optical coupling had to be improved to reduce the beam spread to be closer to the tungsten lamp's distribution.

5.1.4 Linear Quad-Bore Cavity

As beam divergence of the Fresnel drum lens is proportional to the source's vertical extent, efforts were taken to reduce the source size by folding the discharge path. To this end, quad-bore LE/Ar lamps were evaluated. These lamps were made by taking a length of double-bore tubing and folding it over on itself. In this way, the overall arc length was increased without increasing the overall source length. A 1.5" lamp height yielded some performance gain in the beacon, but the complexity of construction of the lamp made it impractical.

5.1.5 Helical Single-Bore Cavity

Increasing the lamp's effective radiating surface area without increasing its height was also evaluated. After several design attempts, the best configuration involved forming the LE/Ar lamp into a helical coil. The helical geometry presented in Figure 5-1 depicts the final assembly design described within this report. Lamps were made from both single and double-bore tubing. In the double-bore lamps, it was extremely difficult to position the mercury down the tube to the electrodes. Positioning the mercury in single-bore lamps was much easier from a manufacturing standpoint. The preferred lamp geometry was obtained using 2 mm inner diameter (I.D.) by 4 mm outer diameter (O.D.) quartz tubing shaped to form four "turns" with a vertical extent of 0.8" and a total discharge length of 9.5".

5.1.6 Circular

A circular "hoop" geometry LE/Ar source also was developed in Phase II work to evaluate a novel beacon optics approach that involved coupling the circular lamp source to a toroidal, compound-parabolic reflector. The lamp essentially was the LE/Ar source except that the quartz is formed into a circle rather than a coil. A drawing of the complete assembly is shown in Figure 5-2.

The mounting and handling of the circular lamp was a concern since no protective jacket is available. The phosphor coat, while hardened during coating, was still prone to scratching and chipping. In addition, the lamp dimensions must meet very tight tolerances for concentricity of shape since the lamp must be positioned close to a reflector. The prototype lamps were fabricated by conforming the quartz tubing to a carbon mandril of the desired circular geometry. After establishing the basic shape, electrodes were inserted into the quartz tubing and the lamp was processed. Preliminary performance data on the prototype circular lamps are summarized in Table 7-4 in Section 7.2.

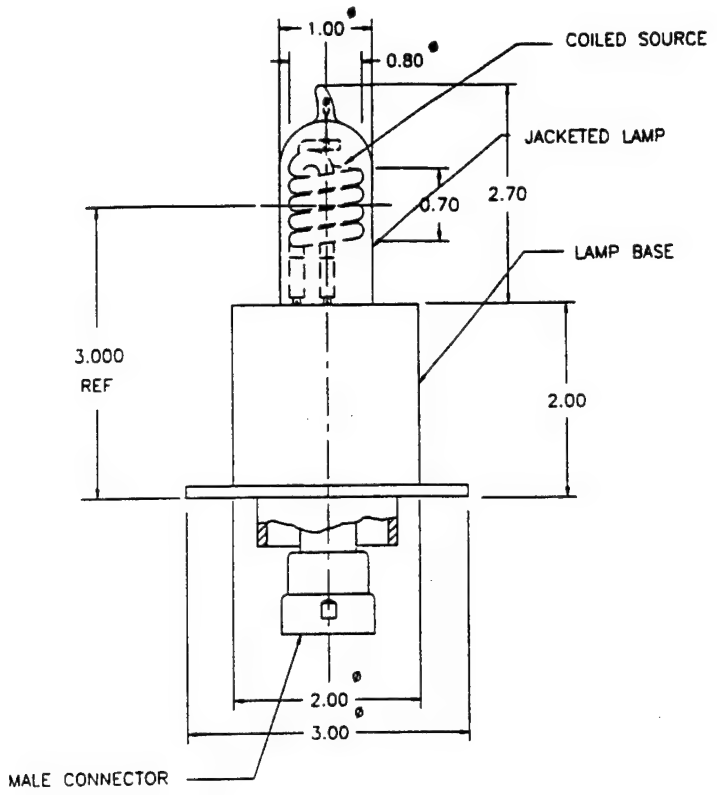

Figure 5-1. Helical Coil LE/Ar Lamp Configuration

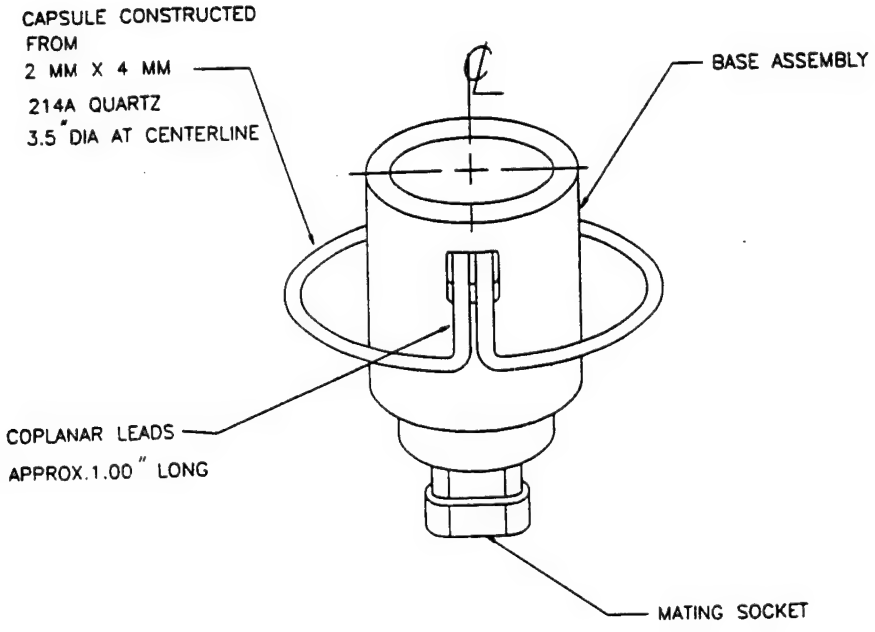

Figure 5-2. Circular LE/Ar Lamp Configuration

5.2 LE/Ar Lamp Components

5.2.1 Mercury Pools

Initially, the LE/Ar lamps were filled with 30μl of mercury. However, there was a strong tendency for the mercury to migrate up into the tubes and interfere with the processing and handling of the source. To minimize the migration, an open-tungsten "mesh" was attached to the electrodes to trap the mercury and hold it in place at the base of the lamp. The mesh was made with a short length of triple-coiled tungsten filament normally used in incandescent lamps, slipped over the tungsten rod electrode. However, the high surface tension of the mercury prevented it from wetting onto the coils.

A set of lamps was fabricated with tubes constricted just above the mercury pool. However, the mercury from the arc tended to recondense in the tubing above the constriction and still obstructed the tubular path.

Experiments with various mercury dose amounts involving detailed X-rays taken of lamps operated in a flashed mode for several days lead to the determination of minimum amount of mercury required for the lamp. The minimum amount had to sufficiently protect the tungsten electrodes while not obstructing the tube at any point. The optimum dose was found to be 10μl of mercury. Preliminary life test results on these lamps are reported in Section 6.3.

5.2.2 Fill Gas

The LE/Ar lamps were typically filled with 40 torr of argon. This fill gas served to slow the migration of the electrons and ions in the lamp, thereby increasing collisions with the mercury. The performance of the LE/Ar lamp was determined to be not critically dependent on the pressure of argon. The effects from various fill pressures are reviewed in Section 6.3. However, cleanliness and purity of the argon were extremely important and must be controlled. Ultra-pure argon (99.999% pure) was used.

5.2.3 Quartz

The radiating cavity of the LE/Ar lamp was formed from fused silica, generally referred to as quartz. Quartz was chosen because it was relatively transparent to ultraviolet radiation, allowing the phosphor excitation when placed on the outside of the lamp (see Section 5.2.6). The use of quartz tubing complicated the fabrication process somewhat, since the quartz required heating to over 1500° C to soften the material.

5.2.4 Electrodes

The electrodes were constructed from filament grade tungsten wire, commonly used in the lighting industry. The electrode surface was chemically cleaned to remove contamination from drawing and handling of the wire. The electrode was attached to a thin molybdenum foil to form a mechanical sealing surface with the quartz cavity. After the electrode was sealed into the lamp, it was rinsed in hydrofluoric acid to remove silica deposited during the sealing process.

5.2.5 Lamp Seal

A major concern in constructing the lamps was matching the coefficients of expansion of the metal in-lead wires and the quartz envelope comprising the lamp. The best match was determined to be provided by molybdenum. However, to minimize the stresses due to unequal expansion, an extremely thin piece of molybdenum foil was used in making the seal. For optimal sealing, the ratio of width to thickness of the molybdenum foil should be greater than 60, and ideally, 90. For example, the 0.03" bore diameter of the double-bore lamps required a foil thickness of 0.0005" (early lamps using 0.0008" foil tended to have low yields). Thinner foil was obtained and the seal integrity improved to acceptable levels. However, the extremely thin foil tended to twist during the sealing process so that the foils in the two channels got close enough that current could be conducted across the partition in the quartz tube. This dictated inspection of the "blanks" to screen them prior to filling. A new mount configuration was eventually designed for the electrode assemblies to hold them apart and reduce twisting during sealing.

When production shifted to the single-bore design this problem was eliminated since the 2 mm (0.079") bore diameter allowed the use of a standard 0.065"x 0.0007" foil.

5.2.6 Phosphor Coating

Because of the narrow bore construction of the LE/Ar lamp, the phosphor coat was applied to the outside wall of the tubing. This had two advantages. First, a simple dipping procedure could be used to apply the phosphor, and secondly the total phosphor coverage was greater, which improved the overall visible light output.

A critical problem associated with phosphor coatings on the outside surfaces of the lamp was that the phosphor tended to flake or brush off very easily when the lamp was handled. The phosphor adhesion was improved by using an organo-silicate (glass) resin made by Owens-Illinois, Perrysburg, OH. This glass resin was designated OI650F and has the chemical formula CH_3SiO_2. It was chosen because it can pass ultraviolet emission, allowing the phosphors to be stimulated. For use with the water-based phosphors, a solution of 10% by weight glass resin in ethyl-acetate was prepared. The solution was sprayed over the phosphor coat using a pump-type atomizer. Finally, the lamp was baked-out in air at 700°C for 5 minutes to burn-off the organic components in the glass resin and the phosphor.

This overcoat technique did not work well when applied to the red phosphor. While the glass resin solution interacted well with the water-based phosphors, the xylene-based suspension agent used for the red phosphor was incompatible with the ethyl-acetate solvent used for the glass resin. To improve adhesion, a solution of 10% by weight glass resin was mixed in a ratio of 5 to 1 in the xylene vehicle and applied directly in with the red phosphor. The volatile organics were driven-off by pre-baking at 120°C for 5 minutes. The lamp was re-baked at 700°C in air for 5 minutes to burn-off the remaining organic components.

Unexpectedly, an adhesion problem was encountered with the white phosphor even with the use of the glass resin. Analysis showed this to be due to a number of factors. First,

the standard 700° C air bake temperature was intended for soft glass that has a softening point close to that temperature. At that temperature, the phosphors penetrate into the glass and improve adhesion. However, the 1500° C softening point left the quartz unaffected by the bake step. Secondly, in contrast to the green 2285 phosphor, which contains a silicate, the white phosphors do not. This difference in chemistry also appeared to affect the adhesion. A partial solution to this problem was achieved by using an undercoat of insoluble alumina on the quartz coil.

Late in the project, the 2285 green phosphor used on the LE/Ar lamp was found to degrade after several hundred hours of operation. An exhaustive study failed to establish conclusively the mechanism for this degradation. The degradation might be prevented by changing the fill gas in the outer jacket. Alternatively, other green phosphors exist that might be suitable for use with the LE/Ar lamp. In either case, further work would be required.

5.3 COLOR

Developmental efforts were carried out in four colors: yellow, green, red and white. At the end of Phase I, the most promising approach appeared to be to use phosphors in conjunction with the LE/Ar lamp. This worked well for the green lamp due to the synergy between the mercury's visible emission and the phosphor's emission. However, unexpected difficulties were encountered with the other colors. The light produced by the red and yellow lamps were not within the International Association of Lighthouse Authorities (IALA) color recommendations (reference 1) due to the interference of the visible mercury emission.

5.3.1 Evaluation Techniques

To evaluate the color performance of the lamps, spectral power distributions (SPD's) were obtained at the OSI Engineering Center using a Jarrell-Ash 0.27 meter monochromator. Colorimetric data was then reduced from the emitted spectral power from 380 to 780 nanometers using the procedure recommended in reference 2. The color specification defines colors by giving the amounts X, Y, Z of three imaginary primary colors required by a "Standard Observer" to match the source being measured. The amounts were calculated from the emission properties of the source and a set of response functions which describe the "Standard Observer". The summation of the emission contained within each of these response functions determines the values for X, Y, and Z, which are referred to as tristimulus values. From these, three chromaticity coordinates, x, y, z, are computed. The x, y pair is usually plotted and is referred to as the CIE x, y chromaticity diagram. A brief summary of colorimetry is contained in reference 3.

A method set forth by MacAdam (reference 4) was used to represent the visually perceived color difference between the various lamps and the target chromaticity ranges. The "Just Noticeable Difference" (JND) steps in chromaticity commonly are used to describe lamp color differences. These are related to MacAdam ellipses in the chromaticity plane that are based on experiments where an observer matches the chromaticity of a source by varying chromaticity of a second source. An ellipse is the

locus of one standard deviation in matches with the center point, and a JND is about three standard deviations. This and similar experiments have clearly shown that discrimination of small color differences depends on factors such as (angular) size and luminance of the target, luminance and chromaticity of the surrounds, etc. Nevertheless, the JND step is commonly used as a rough indicator for light sources. Over a limited region of chromaticity, the JND steps form an ordinal scale such that a larger number of steps are perceived as a greater difference.

5.3.2 Color Development Studies

5.3.2.1 Phosphor Tests

Over the course of the project, a several phosphors produced by OSI (reference 5) were evaluated in order to identify one exhibiting an optimum lamp color and lumen output. The x and y color coordinates of the emission spectra of the phosphors evaluated with the LE/Ar lamp are listed in Table 5-1. The phosphor ID number is an OSI catalog reference number.

5.3.2.2 Dyes and Filters

To improve the chromaticity of the lamps emitting in red and yellow, various filtering approaches were examined to remove the blue and green mercury spectral lines.

Initially, colored tubing was considered. This approach was abandoned due to problems locating glass tubing in the colors and sizes required for the LE/Ar lamps with phosphor to meet the color requirements for yellow and red and in a size large enough to fit over the lamp coil.

Thin film dichroic coatings were also evaluated. These are interference filters made of alternating layers of materials with different indices of refraction. With this method, the mercury spectral lines outside of the desired color band are eliminated. However, this did not provide sufficient filtering of the mercury lines.

TABLE 5-1. PHOSPHORS EVALUATED FOR USE WITH THE LE/AR LAMPS.

Chemical Formula	Phosphor ID	Color	Chromaticity Coordinates	
			x	y
Zn_2SiO_4:Mn	2285	Green	0.247	0.716
(Ce,Tb)$MgAl_{11}O_{19}$:Ce:Tb	2297	"	0.326	0.591
Y_2O_3:Eu	2342	Red	0.658	0.341
$Mg_4(F)(Ge,Sn)O_6$:Mn	2364	"	0.737	0.292
YVO_4:Eu	2390	"	0.691	0.338
ZnS	523	Yellow	0.545	0.453
$Ca_5F(PO_4)_3$:Sb:Mn	4340	"	0.484	0.478
$Y_3Al_5O_{12}$:Ce	2511	"	0.431	0.551
$BaMg_2Al_{16}O_{27}$:Eu	246	Blue	0.145	0.082
$Ca_5F(PO_4)_3$:Sb	2440	"	0.223	0.299
$Ca_5(F,Cl)(PO_4)_3$:Sb:Mn	4450	White	0.407	0.405
	4450 + 2440	"	0.329	0.364
Red Phosphor Blend	2342+2364+2390	Red	0.668	0.330

Commercially-available colored stains called Great Glass, manufactured by Plaid Enterprises, Norcross, GA were also considered. Samples of glass tubing were coated with red and amber stains and evaluated with the LE/Ar lamp. This is discussed below in Sections 5.3.5.2 and 5.3.6.

5.3.3 Green

The green lamp was fabricated using a common OSI phosphor denoted 2285. This green phosphor was chosen because of its strong, saturated green color, high efficiency and ease in handling and coating.

The spectrum of the green lamp included the contribution of the visible lines of the mercury spectrum (which constitute 24% of the light) since it had a strong line in the green. The spectrum for the coiled LE/Ar lamp with this phosphor is shown in Figure 5-3 (the mercury lines are indicated).

The green LE/Ar lamps achieved an efficacy of 25 lpw at 3 watts and a MHI in the 155 mm beacon of 31 candela measured at 25 feet. This compares to 3 lpw and 33 candela for the Coast Guard's 0.55 ampere incandescent lamp with the green lens. The green phosphor consumes 87% of the total ultraviolet emission and 93% of the 254 nm emission. The color coordinates were: $x = 0.2544$, $y = 0.5740$. As shown in Figure 5-4, this lies just outside the IALA preferred region for green but well within the general region. The distance from the measured point to the edge of the IALA region is 4 JND steps. Note that the chromaticity values are within the general CIE region (reference 9).

5.3.4 White

Initially, OSI 's standard Cool White phosphor, commonly used in fluorescent lamps, was applied to a LE/Ar lamp. The lamp's spectrum with the Cool White phosphor is shown in Figure 5-5. At 3 watts, the efficacy was 16 lpw for a small double-bore lamp, compared to 14 lpw for the Coast Guard's incandescent lamp. The lamp emitted a fine white light, with chromaticity coordinates of $x=0.335$ and $y=0.351$, positioned slightly above the black body curve for a 4280K source on the CIE chromaticity diagram.

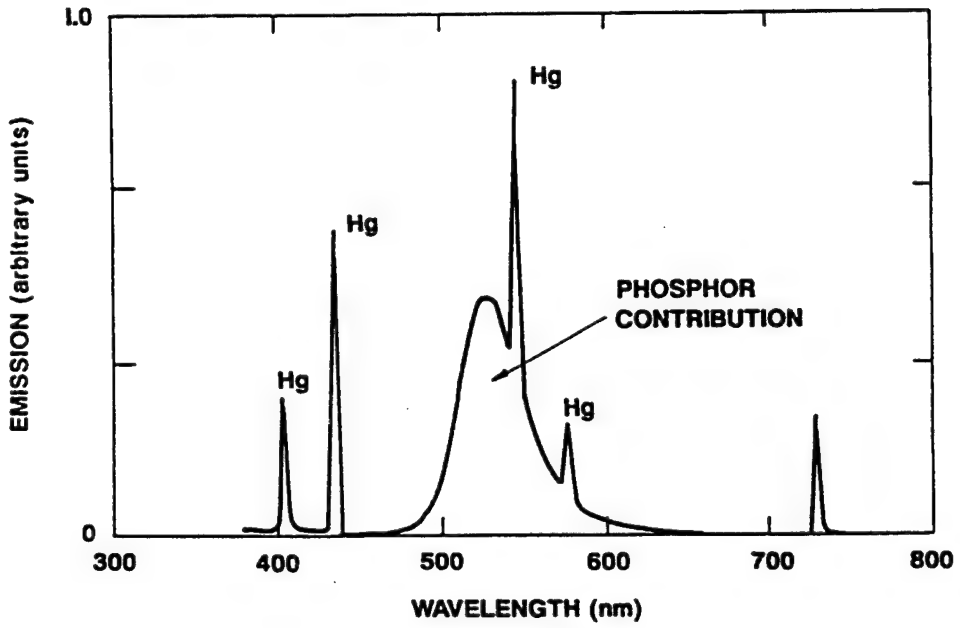

Figure 5-3. Spectrum of LE/Ar Lamp with 2285 Green Phosphor

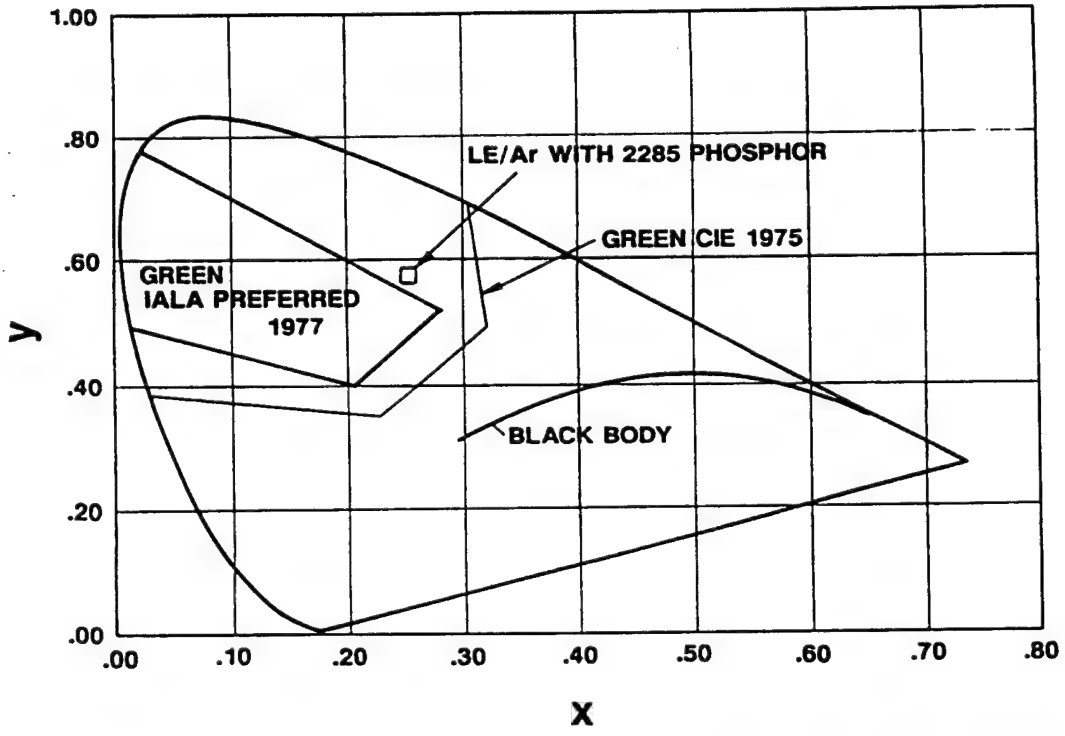

Figure 5-4. Chromaticity Coordinates of LE/Ar Lamp with 2285 Green Phosphor

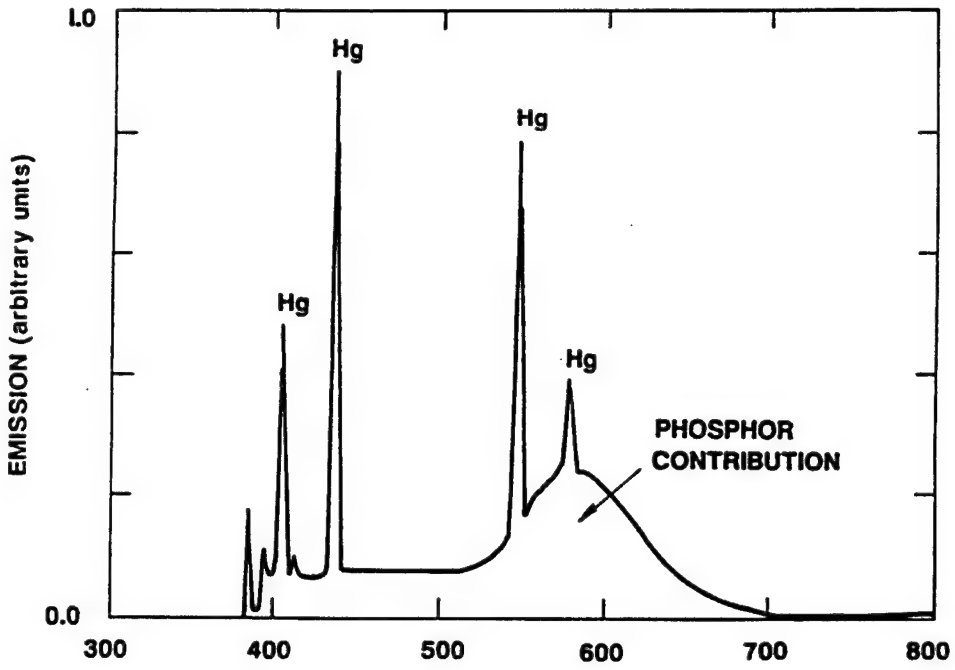

Figure 5-5. Spectrum of LE/Ar Lamp with Cool White Phosphor

A Daylight White phosphor was also evaluated on a LE/Ar lamp. As with all the phosphors evaluated, the efficacy improved at lower power levels. Operating on a 60Hz AC power supply, the peak efficiency occurred at approximately 1.2 watts with an efficacy of 12.5 lpw. The Daylight White phosphor has higher color temperature, and hence more blue emission, than the Cool White.

The delivered prototype white lamps were fabricated with Cool White phosphor, and met the x-y chromaticity requirements in the IALA recommended region.

5.3.5 Red

5.3.5.1 Phosphors

The research team found it much more difficult to achieve adequate brightness for a lamp with a red phosphor than with a green phosphor. First, since mercury has no emission in the red part of the visible spectrum, all of the light must be generated by the phosphor.

Second, the energy conversion efficiency is much lower for a red phosphor than for green because a red photon has much less energy than a green photon while, in general, the phosphor is stimulated by the same distribution of ultraviolet emission. By comparison, a tungsten lamp is heavily weighted in the red and infrared which is advantageous for the longer wavelength output.

Three common red phosphors have OSI catalog numbers 2342, 2364 and 2390. These phosphors were evaluated during Phase I, and described in the Task 2 Final Report. (reference 10, Appendix A). None of these phosphors alone produced the required red emission. In an attempt to produce a better match, these three phosphors were mixed together (denoted Red Phosphor Blend), to improve coverage in the red region of the spectrum. Using a set of computer programs to perform colorimetry calculations on spectral data, the research team simulated the effects of blocking the residual mercury emission on the chromaticity. When this calculation was performed for the spectrum of the Red Phosphor Blend alone, the chromaticity coordinates were calculated to be x=0.668 and y=0.330, which met the IALA recommendations for red. However, when tested in the LE/Ar lamp, the phosphor could not meet the color requirement due to the mercury visible emission bleed-through.

The UV emission of a LE/Ar lamp was measured, both with and without the red phosphor coat. Coating weights were examined and adjusted until the phosphor absorbed about 98% of the 254 nm UV radiation, which is a practical limit for complete utilization of the ultraviolet. However, despite the attempts to maximize the UV utilization, the resultant visible color was unsatisfactory.

5.3.5.2 Dyes and Filters

The research team determined that he blue and green lines of the mercury spectrum were not blocked by the phosphor and tended to "bleach-out" the lamp emission, thereby producing a pink appearance. In an effort to reduce that problem, several filtering schemes were evaluated to block the blue and green light.

Different shades of red plastic sheet filters, produced by Lee Colortran, Inc., Totowa, NJ initially were inserted inside of glass tubes. This was unsuccessful in achieving color coordinates within the IALA regions, although the match was visually close to the red filtered tungsten lamps.

The Great Glass red stain was also investigated. Because a significant fraction of the LE/Ar lamp's light output came from the blue and green lines of the mercury spectrum, filtering them out caused an unacceptable reduction in the lamp's overall lumen output. The research team evaluated the trade-off between output and color led to determine the minimum density of dye that would give an acceptable red color. Full strength and half-strength dyes (in the Great Glass thinner) were coated onto outer jackets. Spectra were taken of a LE/Ar lamp with the Red Phosphor Blend with and without the dyed jackets. Table 5-2 summarizes the numerical results.

TABLE 5-2. COLORIMETRY OF THE LE/AR LAMP WITH RED PHOSPHOR BLEND AND RED DYE.

Dye Level	Relative Output (Arbitrary Units)	CIE Chromaticity	
		x	y
No Dye	24	0.5228	0.3337
Half-Strength	12	0.6211	0.3095
Full Strength	11	0.6394	0.3087

As indicated in Figure 5-6, none of these points fall within the IALA recommended red region. The closest point is still 7 JND steps from the IALA region.

As a "best" compromise, the LE/Ar coiled lamp was coated with the Red Phosphor Blend and half-strength red glass dye on the outer jacket. A MHI of 9.4 cd was recorded at 25 feet for this lamp combination. This was 80% of the MHI of the Coast Guard's 0.25 A incandescent lamp. The spectrum for this configuration is shown in Figure 5-7.

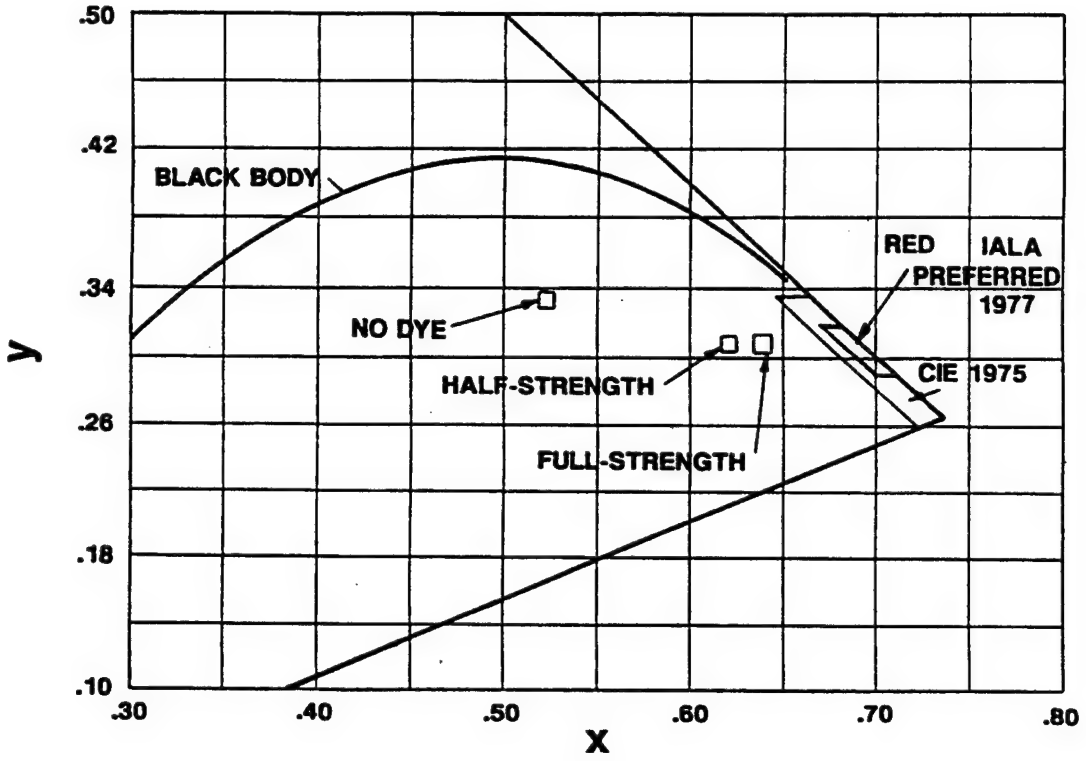

Figure 5-6. Chromaticity of LE/Ar Lamp with Red Phosphor Blend and Dyes

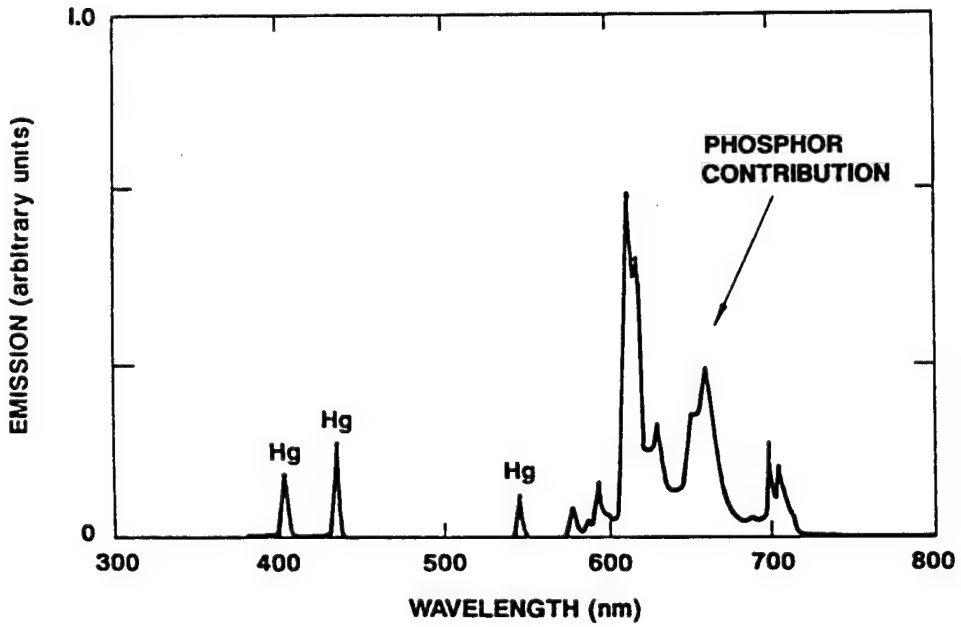

Figure 5-7. Spectrum of LE/Ar Lamp with Red Phosphor Blend and Dyes

5.3.5.3 Neon Lamps

Because of the failure of the LE/Ar lamp with phosphor to meet the chromaticity requirements for red, neon gas was pursued as an alternate approach.

During Phase I, a neon/mercury mix was evaluated. The concept was similar to the LE/Ar lamp except that the argon was replaced with neon. The lamps did not perform as well in output as phosphored LE/Ar lamps. An evaluation of pure neon was conducted in Phase II. The following discussion is separated into neon lamps containing liquid mercury electrodes (LE/Ne) and pure neon lamps with tungsten electrodes and no mercury.

5.3.5.3.1 Neon/Mercury Lamps

Two capsule geometries were initially evaluated in characterizing and optimizing the performance of the LE/Ne lamp. The first type was a cylindrical or tubular geometry formed from a narrow glass tube with an 8 mm arc gap. The second type was an elliptical (prolate spheroid) geometry with the major axis vertical and a 3 mm arc gap.

The emitting region of the elliptical LE/Ne lamp had a complex shape, with light being radiated both from a vertical column and a horizontal plane along the liquid electrode surface. The brightness of the emission was highest along the surface of the mercury pool, which did not couple effectively with the lantern optics.

Initially, the cylindrical LE/Ne lamps were fitted with an open tubulation that connected to a gas feed system to allow neon pressure to be varied while the lamp was running. The tubular lamp's pressure dependence is summarized in Table 5-3. The efficacy (lpw) continued to increase throughout the pressure range examined to about 5.7 lpw at 750 torr (about 1 atmosphere). The gas pressure was not increased much beyond this because the lamp's tubulation would have separated from the valve fitting. Table 5-4 summarizes the pressure dependence of the output of the elliptical lamp. The elliptical lamp's efficacy peaked at 8.8 lpw when the neon pressure was about 500 torr. For both of these tests the lamps were run in a pulse modulation mode with a 60 microsecond pulse width, 2% duty cycle, with an average power of approximately 1 watt.

TABLE 5-3. PRESSURE EFFECTS ON EFFICACY IN TUBULAR LE/NE LAMP

Pressure (Torr)	LPW
100	2.7
200	2.7
300	3.6
400	4.0
500	4.6
600	4.9
700	5.3
750	5.7

TABLE 5-4. PRESSURE EFFECTS ON EFFICACY IN ELLIPTICAL LE/NE LAMP

Pressure (Torr)	LPW
100	2.4
200	4.4
300	4.9
400	7.6
500	8.8
600	7.0
700	7.6
750	6.4

A video processor was used to observe the brightness of the discharge. Analysis of the digital images demonstrated that, as the neon pressure increases, the arc became narrower. At 700 torr, the arc was 70% as wide as at 100 torr.

To improve the lamp's total output, longer arc lengths were obtained by folding the tubular glass. When the lamps were operated at 60 Hz AC the red neon emission rapidly faded and was replaced by the mercury spectrum. The red color was retained only in a pulse mode using 10 microsecond pulses with an average power of 1.3 watts. The neon emission required a different pulse modulation scheme than the one that optimized the mercury ultraviolet emission.

5.3.5.3.2 Pure Neon

Pure neon lamps were evaluated using the folded geometry developed for the LE/Ar lamp. The efficacy of the pure neon lamps was nearly independent of the operating power. The data on the lamps are summarized in Table 5-5.

TABLE 5-5. PHOTOMETRY DATA FOR THE HIGH-PRESSURE PURE NEON LAMPS

Lamp ID	Power (W)	Lumens	LPW
NE14	9	19	2.1
	27	57	2.1
NE15	18	42	2.3
	28	70	2.5
NE16	26	62	2.4

Lamps were constructed in a range of glass inner bore diameters from 1 to 5 mm. In general the efficacy of the discharge increased with increasing bore diameter, but the luminance decreased. When the bore size was reduced below 3 mm the efficacy decreased with increasing power, even though the luminance improved slightly. Optimal performance was achieved with 3 mm bore glass.

The fill pressure also affected the emission output. The optimal fill pressure was determined experimentally by monitoring two prominent emission lines (Reference 6) at 640 nm (neon's shortest wavelength major line) and at 703 nm as a function of pressure. The ratio between these lines as a function of fill pressure is plotted in Figure 5-8. The 640 nm emission alone is plotted in Figure 5-9. The figures indicate that the emission at 640 nm increases peaks at about 600 torr. However, the ratio 640 nm/703 nm increased as the pressure decreases, indicating a slight shift in the neon spectrum and corresponding color. The effect was not significant with observed change in the x chromaticity of approximately 0.02. The lamps had a peak efficacy of 4.0 lpw at 10 watts.

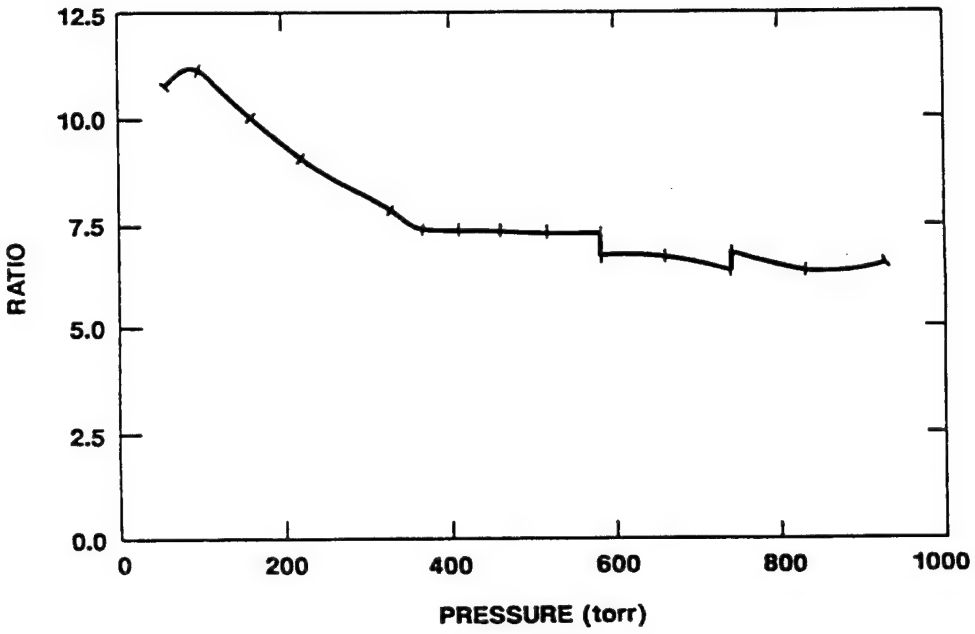

Figure 5-8. Ratio of 640 nm Emission to 703 nm Emission vs. Pressure in Straight Neon Lamp

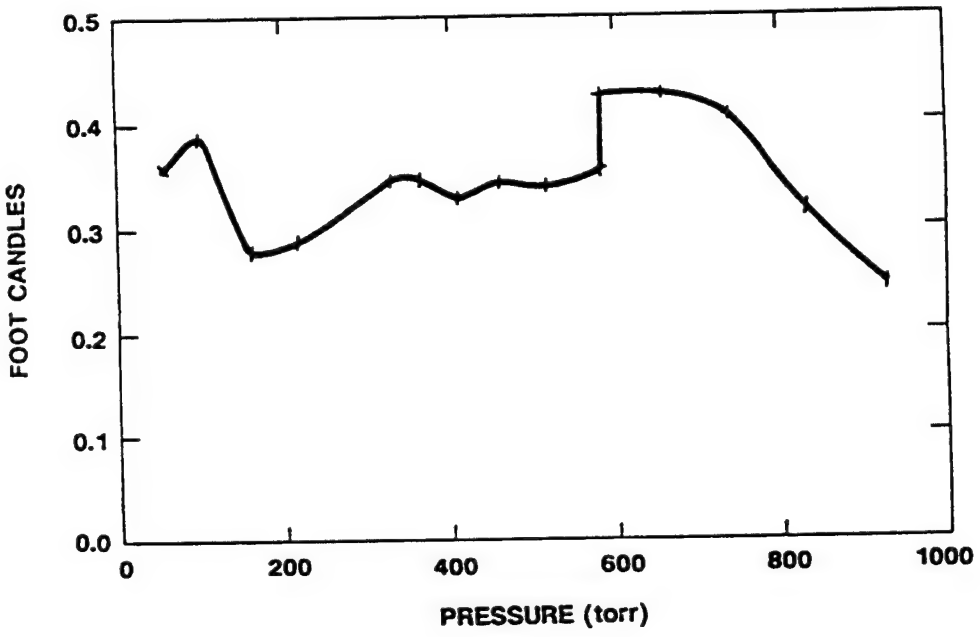

Figure 5-9. 640 nm Line Emission vs. Fill Gas Pressure in Straight Neon Lamp

Because of the low efficacy of these lamps, work on neon was temporarily abandoned. However, subsequent improvements in fabrication techniques developed as part of an unrelated project indicated that a pure neon gas lamp in the coiled geometry would be more effective. These improvements included the use of a coiled tungsten electrode impregnated with a BaO emitter material. For neon pressures from approximately 20 to 200 torr the chromaticity coordinates varied slightly with the average being x=0.670+/-.004 and y=.325+/-.004. A typical test of several neon lamps is plotted in Figure 5-10.

A spectrum of one of the coiled neon lamps is shown as Figure 5-11. The lamps exhibited a slightly orange appearance. The average of the color coordinates was x=0.656 and y=0.338, which is above the IALA preferred red, as shown in Figure 5-12. The coordinates lie on the border of the general CIE region and are 7 JND steps from the IALA preferred region. These lamps use the same power supply/controller as the LE/Ar lamps. They operate at 5 W with an efficacy of 6 lpw.

5.3.6 Yellow

During the development of a yellow lamp, a number of yellow phosphors were evaluated, but none were close to the IALA recommendation for yellow. Instead, the best yellow was given by a red phosphor with an amber filter.

One candidate was the phosphor 2340; however, this phosphor produced a yellowish-white appearance when coated onto a lamp. Another yellow phosphor was a ZnS phosphor denoted 523 that is used in electroluminescent displays. It is very sandy in consistency and difficult to apply. When coated onto a mercury penlight (a 2" long, double-bore, low pressure mercury-argon lamp produced by the Oriel Corporation, Stratford, CT), the lamp actually appeared white, with chromaticity coordinates of x=0.391 and y=0.373, far from the IALA recommended values for a yellow signal.

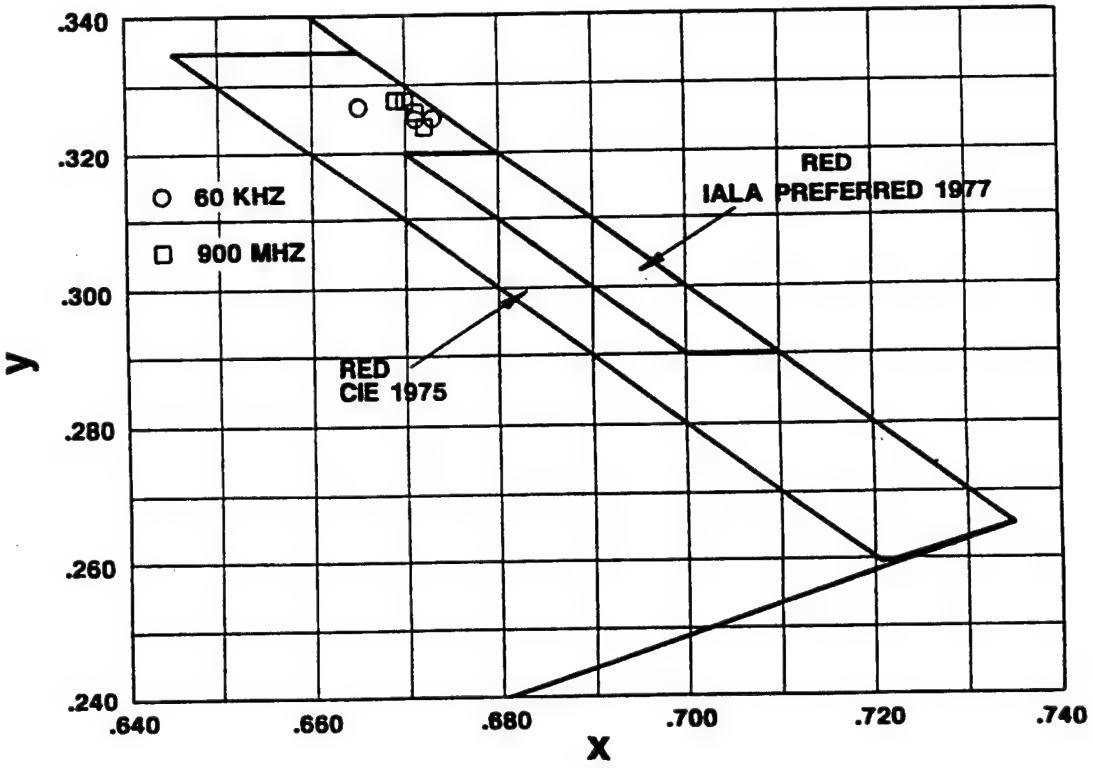

Figure 5-10. Chromaticity Coordinates of Several Neon Lamps

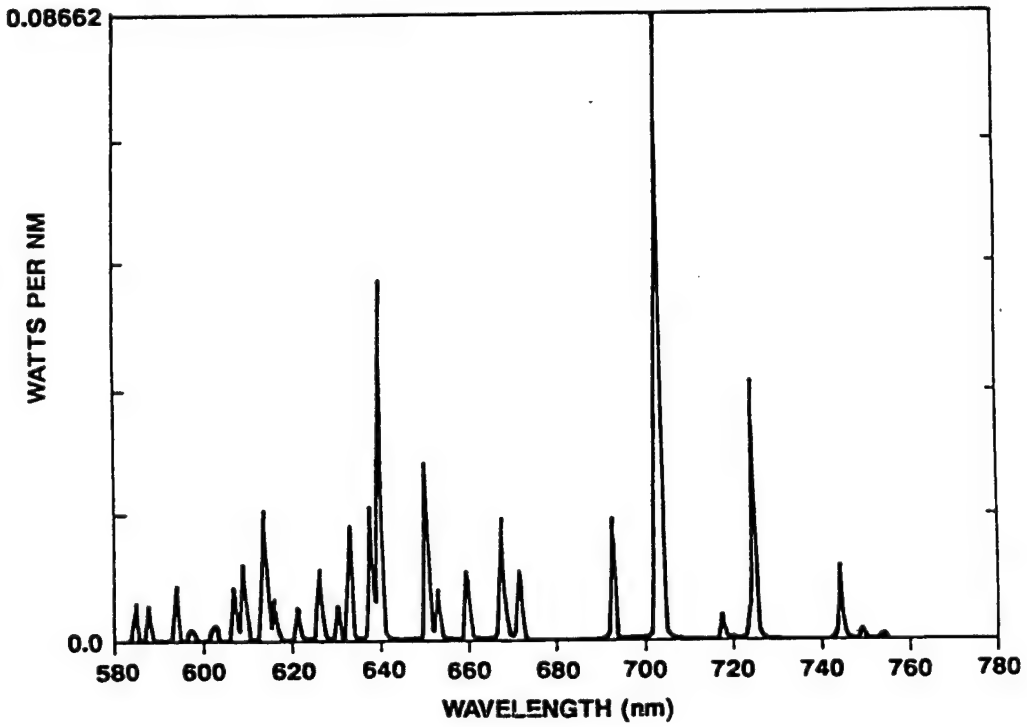

Figure 5-11. Spectrum of Helical Coil Neon Lamp

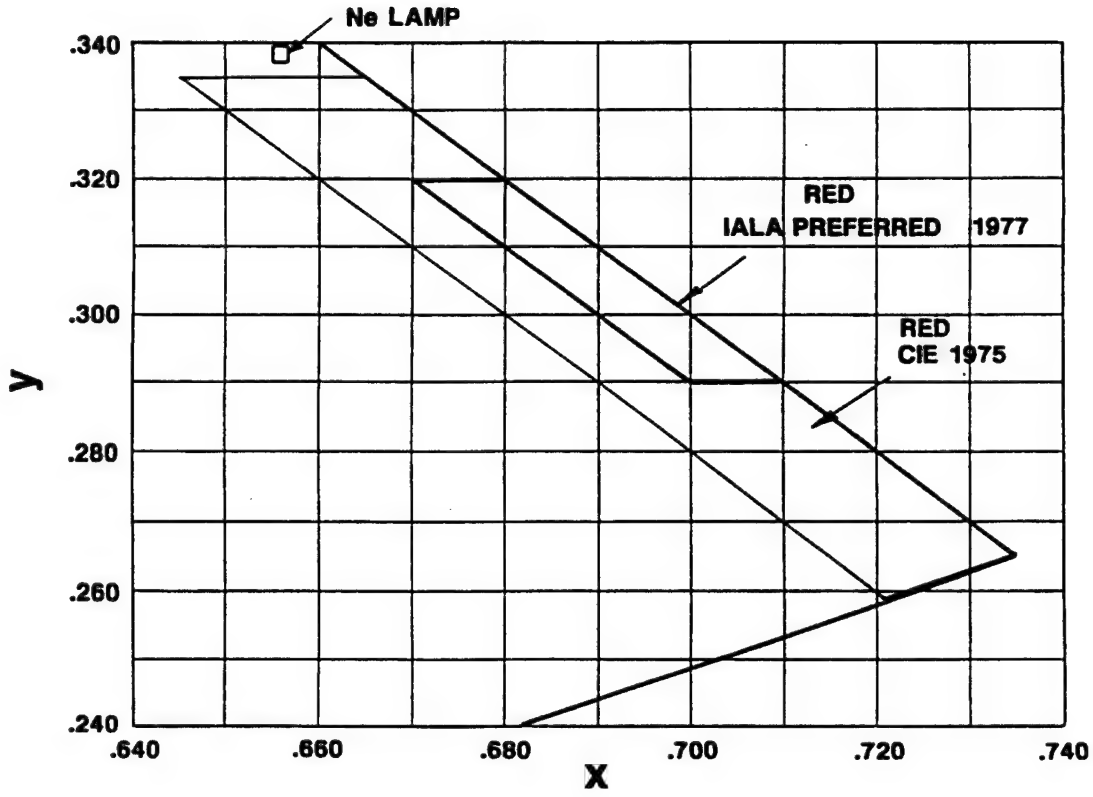

Figure 5-12. Chromaticity Coordinates of a Coiled Neon Lamp

The most promising yellow phosphor was designated 2511. Its excitation spectrum was centered in the deep blue region of the visible. This phosphor was coated onto two glass jackets and tested both with a bare mercury penlight and with a blue phosphor, designated 246, coated onto the penlight. The arrangement incorporating the blue phosphor had twice the output of the 2511 phosphor alone.

To filter-out the unwanted mercury lines, a glass jacket was coated with a 455 nm dichroic cut-off filter to cut-out the residual blue from the spectrum. The jacket was then coated with 2511 yellow phosphor on the inside and put over a mercury penlight coated with 246 blue phosphor and compared (visually) to the same arrangement in a jacket without the dichroic filter. The phosphor in the jacket with the filter was a more defined yellow, but only on the direct line-of-sight normal to the jacket surface. Its color coordinates under different conditions of stimulation and dichroic filtering are tabulated in Table 5-6. As shown in Figure 5-13, none of the points were near the IALA-recommended region.

TABLE 5-6. COLOR DATA FOR THE 2511 YELLOW PHOSPHOR COMBINATIONS

Phosphor	Filter	x	y
2511	NO	0.402	0.537
2511+246	NO	0.376	0.486
2511+246	YES	0.402	0.546

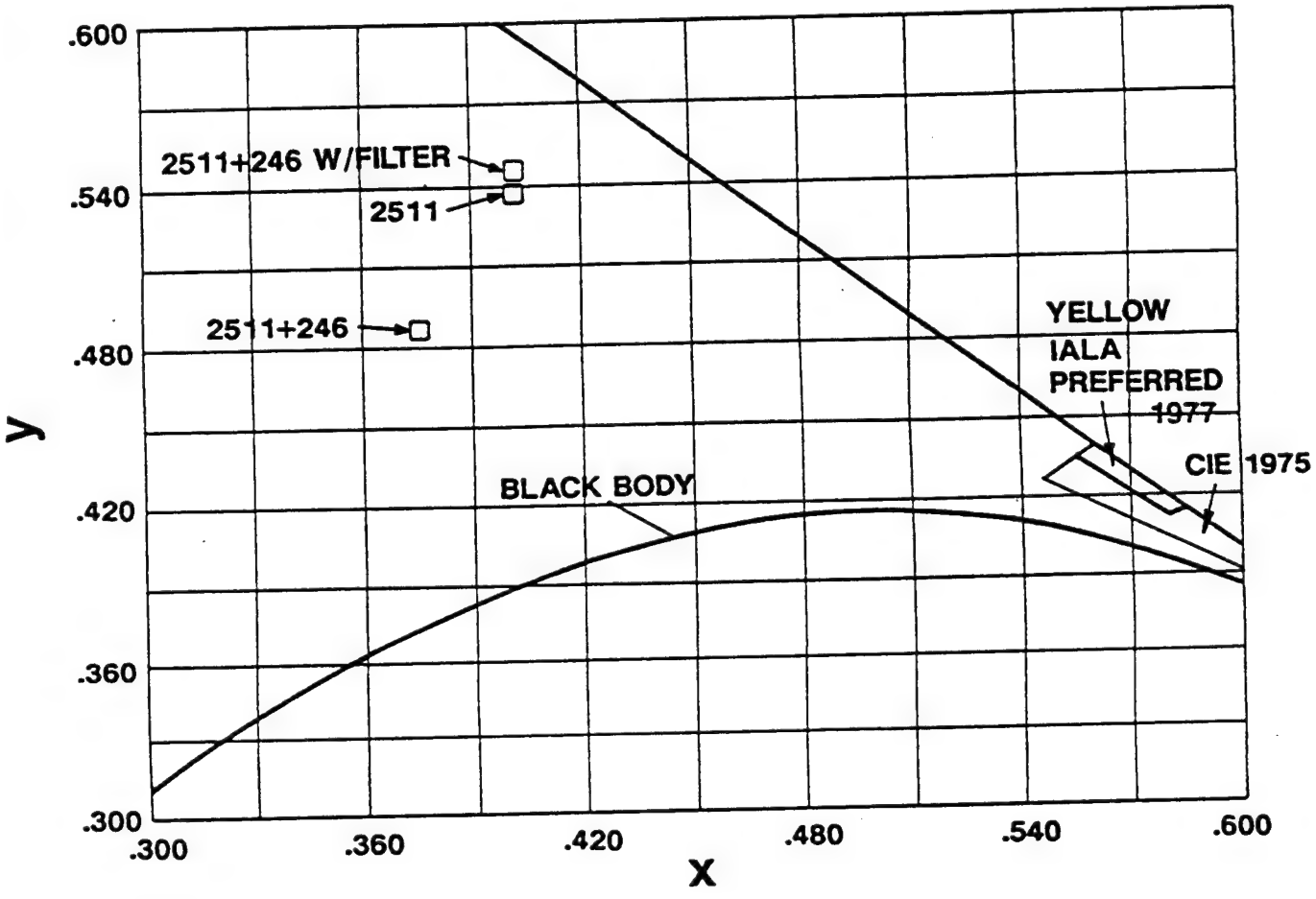

Figure 5-13. Chromaticity Coordinates of the Yellow and Blue Phosphor Combinations

Samples of yellow colored glass tubing were obtained from Stratman Design in Boston, MA, (a neon lamp manufacturer). These were placed over lamps with the yellow phosphors. However, all the lamps were still too greenish in appearance.

The results seemed to implicate that the yellow phosphor did not produce light with a chromaticity deep enough into the red to produce the required amber color. One additional approach considered was to add a red phosphor. Therefore, 4340 yellow and 2342 red phosphors were mixed in a 50/50 ratio and coated onto a mercury penlight. Also, 4340 yellow phosphor and 2342 red phosphor alone were coated separately onto penlights. Line-of-sight spectra were then taken both with and without a glass jacket coated with the Great Glass amber stain. The chromaticity coordinates are listed in Table 5-7.

TABLE 5-7. COLOR DATA FOR 2342 RED & 4340 YELLOW PHOSPHORS.

Phosphor	Jacket	Relative Output (Arbitrary units)	x	y	x Distance From IALA Yellow Box	y Distance From IALA Yellow Box
2342	No	415	0.5556	0.3275	0.0000	0.0689
	Yes	310	0.6014	0.3570	0.0050	0.0394
4340	No	468	0.3996	0.4289	0.1610	0.0000
	Yes	269	0.4354	0.4812	0.1200	0.0460
2342+4340	No	450	0.4905	0.3669	0.1059	0.0295
	Yes	289	0.5326	0.3967	0.0638	0.0000

As depicted in Figure 5-14, the data suggest that the color closest to the IALA recommendation was given by the red phosphor alone. The addition of the yellow phosphor "pulled" the color away from the specification box in the x coordinate. The spectrum of the 2342 red phosphor with the amber-stained jacket is shown in Figure 5-15.

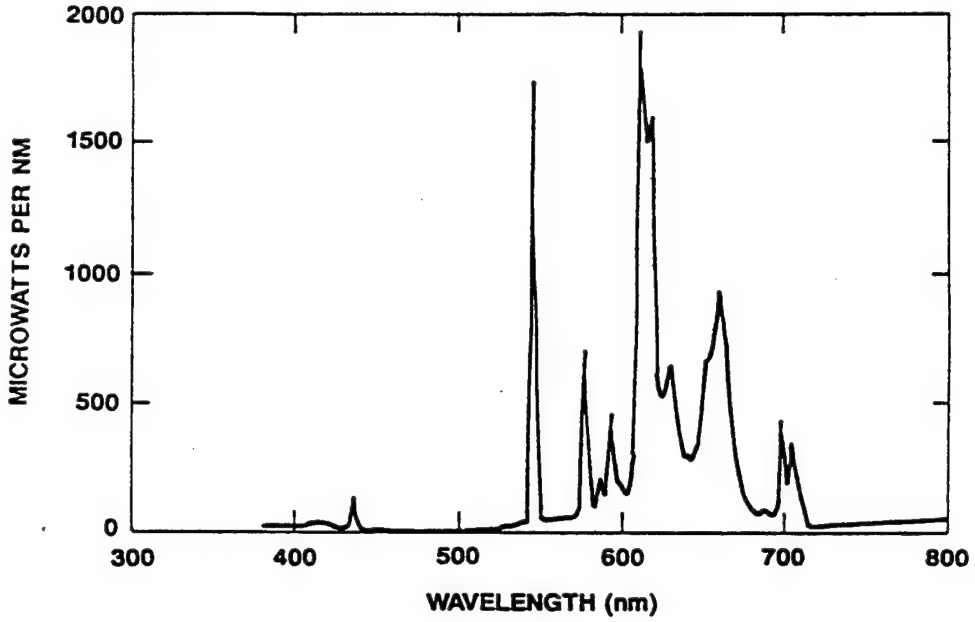

Figure 5-14. Chromaticity Coordinates of the Yellow and Red Phosphor Combinations

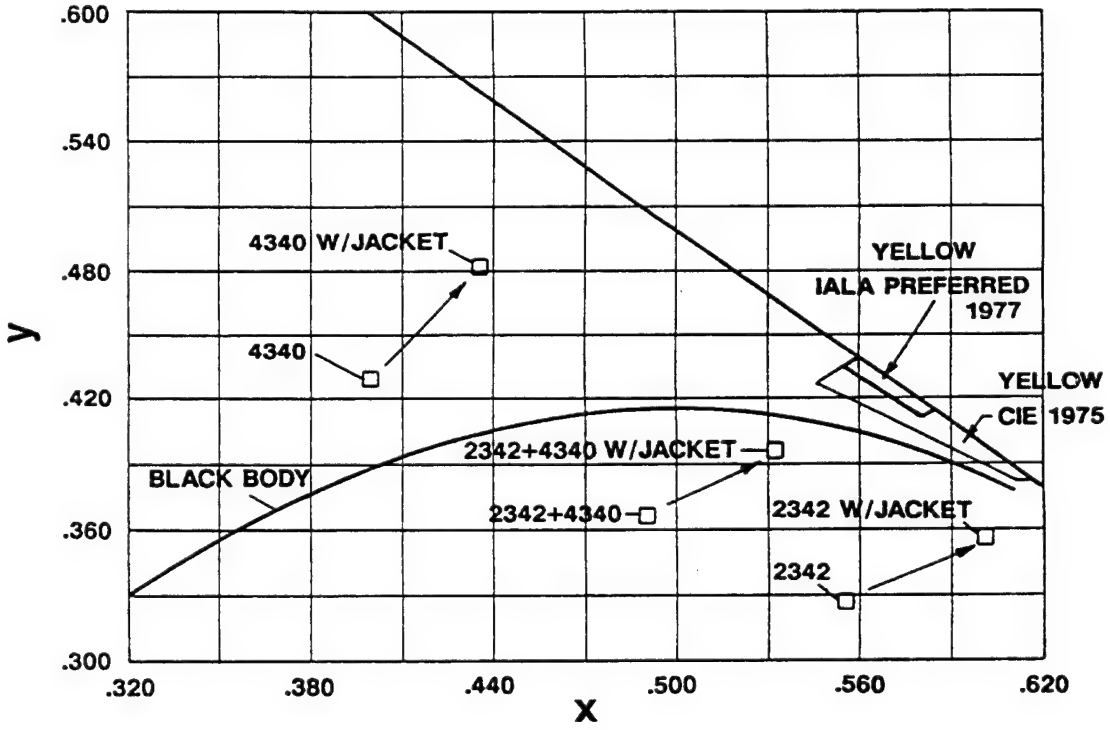

Figure 5-15. Spectrum of a LE/Ar Lamp with Red Phosphor Blend and a Yellow Jacket

5.3.7 Control Devices

5.3.7.1 Theory

A gas discharge is initiated when a high electrical potential is applied between the electrodes that are inside the lamp. As the potential builds up, the local electrical potential gradient increases at the surface of the negative electrode (cathode) until it reaches sufficient magnitude to release electrons from the conduction band of the metal. This process is called field emission and is a precursor to the desired condition which is glow emission.

Glow emission is achieved as the liberated electrons are accelerated toward the positive electrode (anode). As they travel, the electrons encounter other mercury and argon atoms. Some fraction of the electrons will have sufficient energy to produce additional electron/ion pairs through ionization, increasing the total number of charged particles. This activity will continue as long as the applied electrical field is sufficiently high to promote the secondary electron/ion formation. In general the required applied field will depend on the inter-electrode gap, the ambient gas pressure, and the geometry of the path between the electrodes.

If the process continues unabated, the increase in the density of electrons and ions will be sufficient to reduce the impedance between the electrodes. This reduction will enhance the collection of ions and electrons at the respective electrodes and produce additional electrons at the cathode. This condition is called "avalanche" and is responsible for a basic electrical characteristic of discharges, negative I-V, which means that as the current increases within the discharge path the effective potential decreases.

A control device must provide the required electrical potential and balance the charge by supplying current and completing the electrical circuit. Regulation takes place when the current is restricted or regulated by the power supply, thus maintaining a potential drop across the electrode gap. If no regulation takes place the impedance will continue to decrease and eventually a high current density "arc" will form, which is not desired.

In addition to regulating the power consumed by the discharge, control devices are needed to modulate the pattern of flashes and monitor the status of the lamp by providing sensors for lamp failure and dusk-to-dawn operation.

The design and fabrication of the various power supplies and the final high frequency power supply were subcontracted to Garrison Electronics, Henniker, NH, a state-of-the-art design firm in light source power regulation and supply technology. The flash pattern control device was designed and built within OSI.

5.3.7.2 Power Regulation

Several techniques are available for controlling and maintaining the electrical power consumed by the LE/Ar discharge. In all cases an electronic regulating device is required to minimize physical size and maximize electrical conversion efficiency of the input power draw from the battery, which is nominally 12 VDC, into the required electrical potential to control the discharge. This efficiency is the ratio of output power to input power. Any other control device, such as the pre-programmed flash sequencer or the photoresistor, consumes some power. The system power is the sum of all power loads and is referenced to the battery.

5.3.7.2.1 Direct Current (DC)

The most common and simplest regulator is a resistor which has a simple positive I-V characteristic. The LE/Ar lamp can be regulated by applying a stiff DC potential across the series load of resistor and lamp. (In this case the resistor is called a ballast since it stabilizes the power draw.) The application of a series resistor is simple but suffers efficiency losses since the load characteristic of the resistor is to produce ohmic heat.

During the development of the LE/Ar lamp, experiments with direct current operation indicated that electrophoresis was a potential problem. As indicated in Section 6.3, the application of a polarized potential causes bulk migration of the mercury ions from the

positive (anode) electrode to the negative (cathode) electrode. In some cases this "collection" of mercury interfered with the discharge operation and produced an unstable light output. Thus, the direct current approach was rejected.

5.3.7.2.2 Pulse Modulation

In this system of regulating power to the lamp a short, relatively high power pulse is applied to the lamp, followed by a relatively long period in which power is not applied. This is shown schematically in Figure 5-16. The ratio of "on time" to the total period is the "duty cycle". Supplying power to the lamps in this manner improves discharge efficiency by taking advantage of non-equilibrium processes. Initial work on this is described in the reference 10.

The ultraviolet emission of the short arc gap ellipsoidal LE/Ar lamp was studied as a function of pulse width. In this test, high voltage square wave pulses were applied to flash the lamp. The best performance occurred with 70 to 100 microsecond pulses. This is consistent with earlier findings (reference 10) that indicated improved performance for pulses shorter than 1 ms.

Further studies comparing the efficiency of ultraviolet generation of the longer, double-pass type LE/Ar lamps under pulse-modulated and continuous operation indicated that the pulsing scheme gave no significant improvement. Analysis of the waveform of the emission output revealed that the input power was being cut-off while the lamp output was still increasing. This indicated that energy was being expended energizing the lamp and the lamp was extinguished before its maximum emission output could be achieved. Maximum efficiency was obtained when the input power to the lamp was cut-off just when the lamp's output reaches its maximum value. After that point, energy is lost in populating the mercury's upper (visible) energy levels. This conclusion is shown graphically in Figure 5-17.

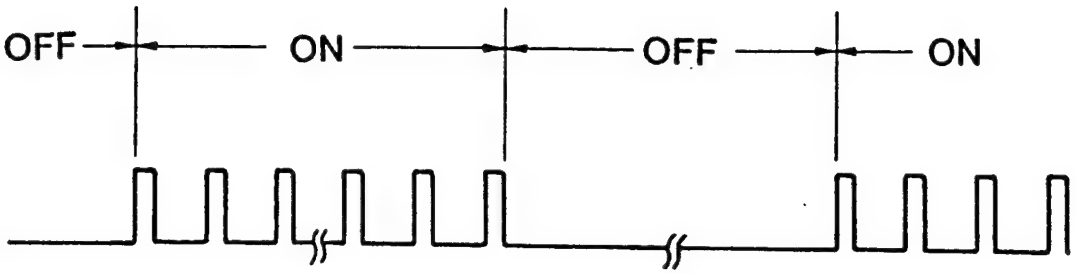

Figure 5-16. Pulse Modulation Wave Form

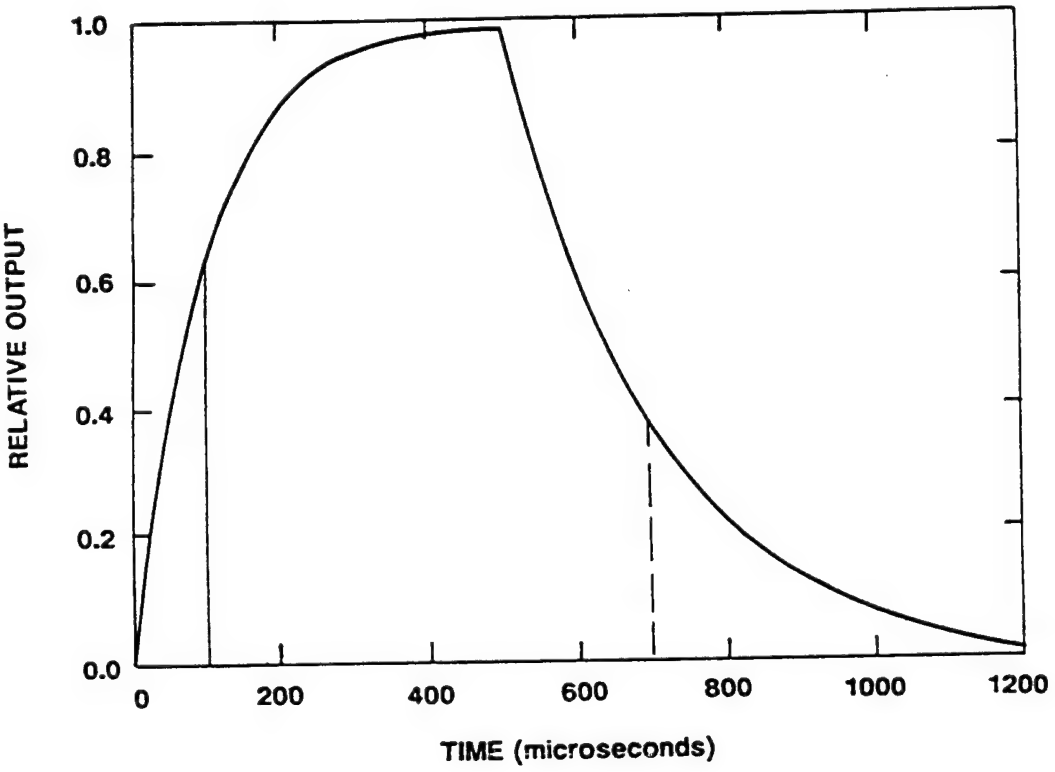

Figure 5-17. Ultraviolet Emission vs. Time of an LE/Ar Lamp Flash

The difference between the operation of the short arc length and long arc length LE/Ar lamps is related to a basic process of gas discharges. Electrons emitted from the cathode are accelerated by the applied voltage between the lamp electrodes. When the electrons achieve sufficient energy (10.4 eV), ionization of mercury is possible, which produces additional ion/electron pairs. The products of the ionizations have very little energy and must be accelerated again until they have enough energy to ionize addition mercury atoms. This repeats until the electron reaches the anode or until the power to the lamp is cut-off. The ultraviolet is then generated by the electrons recombining with the mercury ions. The longer the arc gap, the more of these cycles the electrons must go through before reaching the anode and the longer it takes to form the discharge.

The laboratory equipment was modified so that both the pulse width and pulse repetition rate (duty cycle) could be extended to longer pulses that would be appropriate for the arc gap of the LE/Ar lamp. The data for a folded lamp with 2285 green phosphor are plotted in Figure 5-18. Several combinations of pulse width and internal time (time between pulses) are shown for comparison. In addition, the MHI for the tungsten lamps using the same arrangement is shown. In general, the longer the pulse width and the higher the duty cycle, the more efficient the lamp's operation, although a pulse width of 1,000 μsec and a duty cycle of 50% is marginally better than DC operation. To confirm these results, a group of older lamps were photometered in DC operation. As indicated in Figure 5-19 the lamps' performance was comparable to or significantly better than with 60 Hz AC operation.

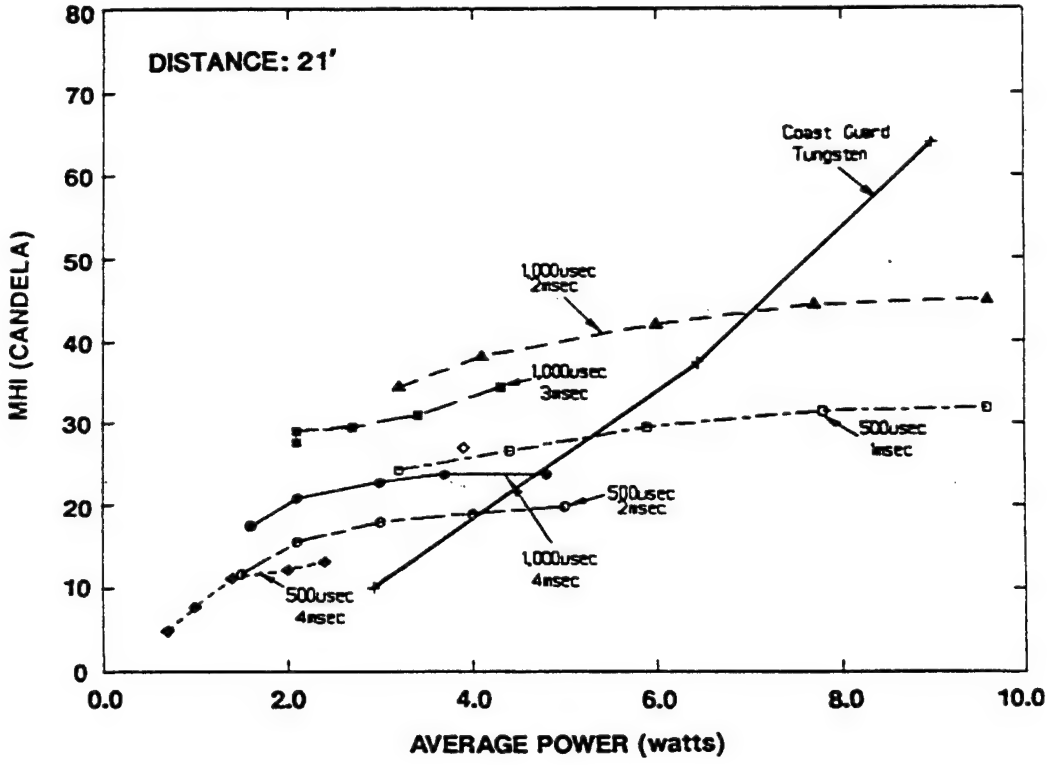

Figure 5-18. Intensity vs. Input Power of an LE/Ar Lamp for Various Pulse Modulation Schemes

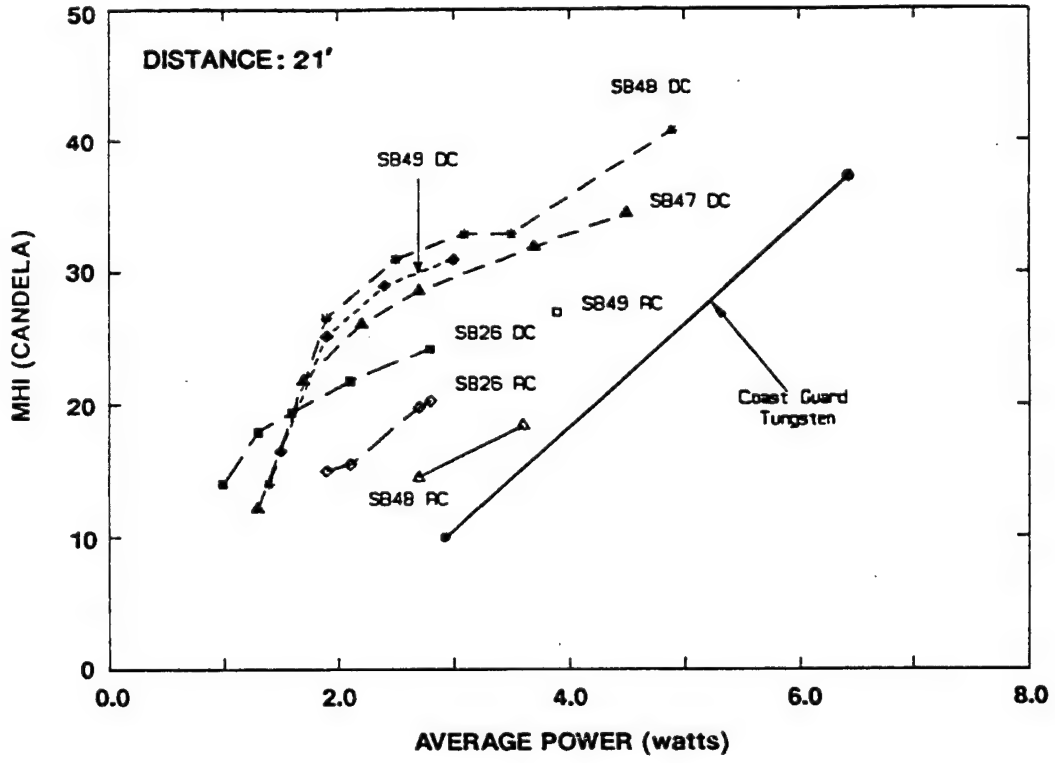

Figure 5-19. Intensity vs. Input Power of an LE/Ar Lamp for AC and DC Operation

5.3.7.2.3 Continuous Wave (AC)

Ideally, the LE/Ar lamp's performance was considered to be best when operated with a high frequency alternating current (AC) square wave power supply. In practice, however, no advantage was gained over operating the lamps with a high frequency sinusoidal wave power supply. This method of driving the lamps has the following benefits:

- The lamps do not have as much time to cool between cycles as at 60 Hz so that less energy is wasted re-starting them at each half cycle.
- The high voltage transformers required to run the lamps are smaller the higher the frequency. This allows them to be potted directly into the base so that no high voltage components are exposed.
- AC power supplies are easier to manufacture.

The design for the AC power supply was based on the following criteria:

- The power supply had to fit into the base of the present beacon housing.
- The controller circuit had to operate the lamps and sense the onset of dusk and dawn to start and stop the lamps.
- The housing had to be fabricated with materials which are resistant to a salt water environment.
- The supply had to have protection against short circuits and reversed polarity.
- No contacts could be exposed except for the 12 V battery connection.
- The power supply must run from a battery with voltage range of 10 - 18 volts DC.

The final power supply (developed by Garrison Electronics) to drive the LE/Ar lamp consisted of a DC to AC inverter mounted inside the controller circuit box, with a high voltage transformer potted into the lamp base. The power supply produced a sine wave signal at 17.5 kHz with open circuit voltage of 2.5 kV. The green LE/Ar lamps operated at a nominal 3.0 W with a system input power of 5.5 W. The red neon lamps operate at a nominal 5.0 W with a system input power of 9.1 W.

The power supply units were designed to be in accordance with section 3.21 of the Coast Guard Purchase Description No. 181B (Reference 7), regarding average and total current draw of the flasher circuit. A completely functional single-lamp beacon assembly was evaluated for daytime and nighttime operation. The flash pattern chosen for the nighttime mode was Fl 6(.6) (0.6 seconds "on" and 5.4 seconds "off") which resulted in a 10% duty cycle. Data obtained from measurements of the current draw for the component electronic devices, including the pre-programmed flash sequencer and the photoresistor control amplifier, are summarized in Table 5-8.

TABLE 5-8. SUMMARY OF TOTAL INPUT CURRENT DRAW FOR LE/AR BEACON POWER SUPPLY

Input Voltage (VDC)	Night-Time Power Brd Current (mA)	Night-Time Controller Brd Current (mA)	Day-Time Power Brd Current (mA)	Day-Time Controller Brd Current (mA)
10	18.8	4.7	2.7	1.1
12	17.5	5.0	3.1	1.1
14	16.6	5.3	3.6	1.1
16	16.0	5.6	4.0	1.2
18	15.6	5.8	4.4	1.2

The daytime controller current was associated with the circuitry to monitor the ambient light level. The nighttime controller current was that drawn from all the logic functions being active. The power board daytime current was drawn by active circuitry that monitored signals from the controller board and determined if the power board should be shutdown or active. The nighttime current was drawn by an on-board "housekeeping" power supply.

The contract specification required that the total current drawn by the flasher and load combined under "daytime" operation (when the illumination-control is activated) over the input voltage range 10-18 VDC not exceed 6 ma at 70°+/-5° F, and 25 ma at 125° F. As indicated in the table the daytime draw was within specification. The "nighttime" current

draw is approximately twice the specification, which is attributed to the power consumption of the DC to AC inverter circuitry.

5.3.7.3 Flasher Circuit

The flash controller circuit board was designed and manufactured by M-Tek, Nashua, NH. A screwdriver-adjustable, multi-position switch to select the flash pattern was mounted inside the controller. Voltage regulators were incorporated in both the controller and lamp power supply circuits to allow proper operation over an input voltage range of 10 to 18 volts.

The flasher circuit was programmed to produce eight flash characteristics. The characteristics included several standard Coast Guard flashes and an additional 0.2 sec "on", 0.2 sec "off" ultra-quick experimental flash pattern (designated as "UQ") included in Table 5-9. The power supply could be programmed to provide any of the following pulse patterns (using a user-settable switch inside the power supply box):

TABLE 5-9. LE/AR LAMP POWER SUPPLY FLASH CHARACTERISTICS

Switch Position	Pattern
0	FIXED
1	ISO 6
2	Fl 4(.4)
3	Fl 6(.6)
4	Fl 2.5(.3)
5	Q
6	UQ
7	Mo (A)

There was no commercially available enclosure that both accommodated the circuitry and met environmental requirements of the contract. Therefore, an enclosure was custom-fabricated out of PVC and lexan.

5.3.7.4 Dual Lamp Assembly

Short-range aids-to-navigation systems are equipped with multiple light sources to allow for redundancy and improved system reliability. Since only one can be used at a time some mechanical device is required to position the "spare" lamps when a lamp outage occurs. The minimum redundancy is obviously two lamps. A mechanical two-lamp changer appropriate for the LE/Ar lamp was developed.

Measurements were taken in the 155 mm diameter beacon of the eclipsing by the spare lamp in the beacon when mounted at the same height as the operating lamp. There was a depreciation of as much as 70% across a shadow 10 degrees wide. This indicated the lampchanger had to be designed so that the spare lamp sat below the line-of-sight of the operating lamp. Therefore, measurements of the second lamp height were made to determine when it would begin to attenuate the light from the operating source. The second lamp had to be at least 1.25" (38 degrees) below the operating lamp (4.5" above the beacon's mounting platform) for a lamp in a 2" high jacket.

The lampchanger was a 4-bar linkage assembly that held two lamps, thereby keeping the spare (or inoperative) lamp below the line-of-sight of the working lamp. When the lamps were swapped, they moved in an arc, always being held in a vertical orientation. The solenoids and power springs were obtained from Automated Power Systems. The lampchanger was made by Atlantic Industrial Models, Marblehead, MA. A sketch of the lamp changer is shown in Figure 5-20.

A prototype of the lampchanger had a tendency to stick against the beacon housing when pushed down on re-setting. This was solved by using a set of spacers put under the lamp platforms. In addition, a supplementary spring was added to the axle of the lamp changer to improve the rotation reliability.

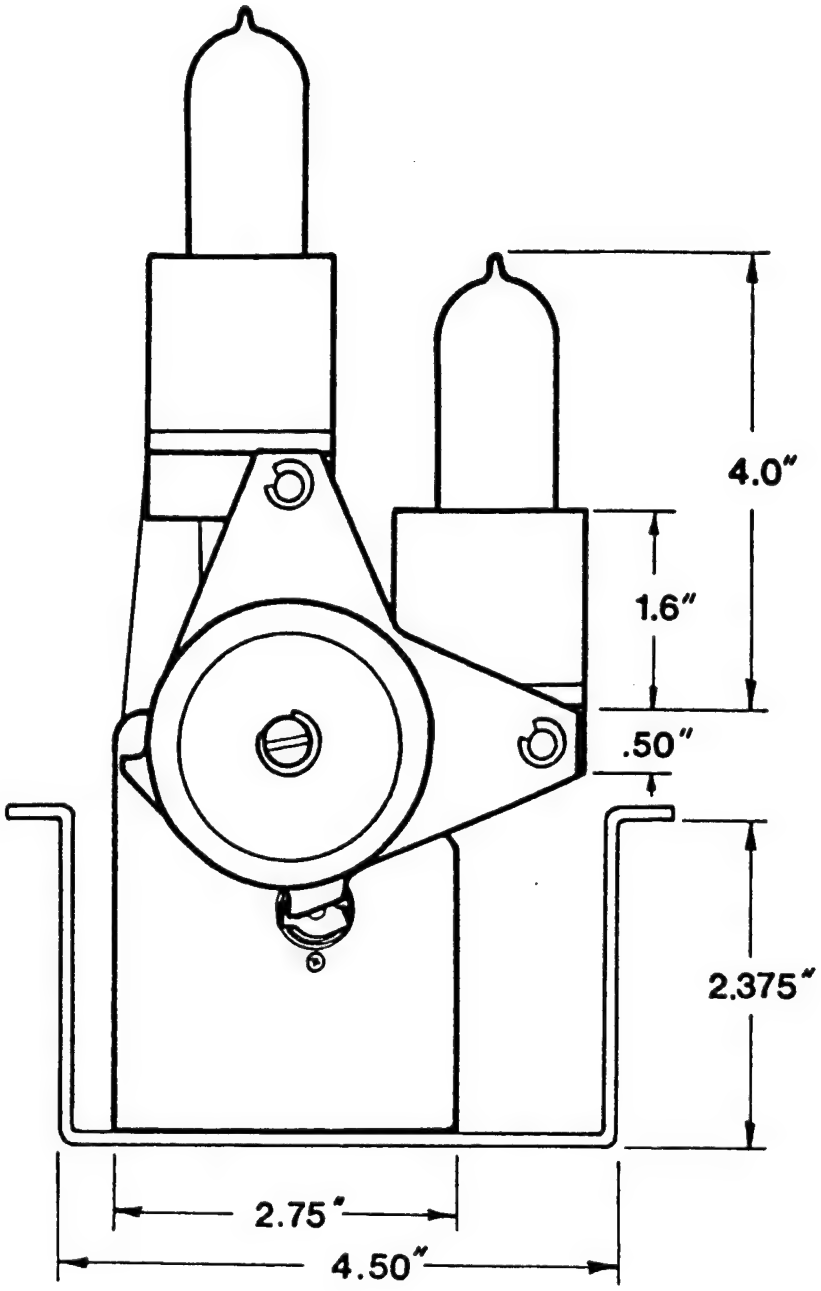

Figure 5-20. Twin LE/Ar Lamp System Design

As the arc lamp circuit is normally "open", it was necessary to design a circuit that monitored the lamp emission in order to determine a lamp failure status. Although a simple matter when the lamp is flashing, it was significantly more complex when the lamp was operated in a "fixed on" mode. The initial design employed two photodetectors: one as the ambient light monitor, and the other to monitor the lamp output. At such close proximity, the light from the lamp dominates over any external sources at night.

To simplify the lampchanger system, the use of a single photocell was investigated for both day/night and lamp failure. This approach was considered feasible only if the lamp emission was modulated with the AC driving frequency (i.e., if the discharge and phosphor do not have too much persistence). The photoresistors used by the Coast Guard did not have a fast enough response to detect the 17.5 kHz signal from the power units. Therefore, a photodiode (from United Detector Technology) was used to meet the speed and sensitivity requirements. Additional investigation was not pursued when changes in the contract shifted work to development of a single-lamp assembly.

A base was made for mounting the lamp securely without a socket. The lamp was cemented into the base, which was then bolted to the platform of the lamp changer. Wires exiting the bottom could then be secured to the power supply. This arrangement required that the lamp and power supply (and possibly the entire lampchanger) be swapped-out as a single unit to avoid exposing the field technicians to high voltage. The maintenance philosophy considered was to send the lamp and power supply back to the manufacturer for servicing, (i.e., replacing the lamps). The design also precluded making the lamp and power supply a single unit mounted on the lampchanger since it would be too big to fit into the available clearances in the 155 mm beacon and too heavy for the lampchanger mechanism to move easily.

The power supply for the two-lamp system, therefore, was incorporated into a package at the bottom of the beacon housing. An in-line plug between the lamp and the power supply was installed to allow re-lamping on site.

However, optimization of the two lamp system lampchanger and power supply was abandoned to pursue the single lamp system more rigorously.

5.3.7.5 Single-Lamp Assembly

As stated above, the complexity of the two-lamp system drove the decision to defer delivery of the two-lamp (lampchanger) system to a later date and to concentrate on the single-lamp system development instead. The designers chose to design hard-wire the lamp system and mount it onto the box using a bi-pin bayonet mount and the photodetector would be mounted inside the controller circuit box so that it does not need to be serviced by Coast Guard field service technicians. The only external connection would be the power lead connectors to the battery. A keyed bi-pin connector that is used for standard automotive headlights was incorporated as the lamp socket assembly.

Without the requirement that the lamp and lamp base be light enough for the lamp changer to flip-over, a new base could be developed for the single-lamp system that has enough room to install the high voltage transformer and current coil directly inside. This simplifies assembly of the controller circuit box and allows them to be interchangeable -- only the lamps have to be color-coded.

6. LE/AR SYSTEM TESTING AND MEASUREMENT

6.1 Photometric Equipment and Measurements

Most of the photometric development work was carried out in a 25 foot darkroom. Since this distance may be too short for absolute measurement of lamp performance in the beacon optics, comparisons were generally made on a relative basis by measuring the tungsten lamps under the same conditions.

6.1.1 Integrating Sphere Lumens

The output of the incandescent lamps presently used by the Coast Guard were measured to corroborate a correlation with the Coast Guard's published data.

To measure the light output, lamps were placed inside a 12" diameter integrating sphere. The sphere has an exit port with a baffle between the lamp and the port to eliminate direct illumination of the port. The amount of light detectable at the port is proportional to the total output of a lamp over all space. The relative output was measured using an EG&G Model 550 photometer placed at the exit port. A standard incandescent lamp of known total lumen output was operated in the sphere to normalize the photometer to actual lumens. The standard lamps were provided by OSI's Test and Measurements Group.

An initial evaluation of one of the 0.25 ampere lamps when run at rated current yielded 24.9 lumens, which was not in good agreement with the data presented in reference 8. As a follow-up, a set of USCG incandescent lamps were evaluated at rated voltage to be consistent with the methods used in reference 8. The results are summarized in Table 6-1.

TABLE 6-1. SUMMARY OF PHOTOMETRIC PERFORMANCE OF STANDARD USCG LAMPS

Listed Current (A)	Number of Lamps	Current at Rated Voltage	Lumens at Rated Voltage	Lumens Reported **Ref. 8**
0.25	2	0.25 +/-0.00	28.25 +/-0.21	30.4
0.55	3	0.53 +/-0.00	73.12 +/-2.30	63.3
0.77	4	0.815 +/-0.01	143.7 +/-1.70	116.0
1.15	2	1.12 +/-0.02	209.8 +/-2.23	195.0
2.03	1	2.04	388.2	402.0
3.05	2	3.11 +/-0.02	575.9 +/-17.96	600.0

6.2 Filter Transmission Measurements

To facilitate comparison of the luminous output of lamps of different colors to the performance of the Coast Guard's incandescent lamps, it was found useful to determine the transmission spectra of the various beacon filters. Initially, MHI measurements were carried-out using the 250mm diameter beacon. Therefore, the colored filters from this beacon were used for the transmission measurements. These filters also had the advantage of being flat (without any lens power), which facilitated the performance of the measurements.

There are two basic methods to measure the transmission of a filter -- absolute (power) percent transmission and luminous (referencing the eye's visual response curve) percent transmission. Absolute transmission is measured by taking a spectral power distribution of

a lamp both with and without the filter in question and taking the ratio of their integrals. Determination of luminous transmission is more complex. In this case, the transmission of the filter is dependent on the color temperature of the lamp used as a reference. This is because, as the color temperature of the source increases, its emission shifts more towards the blue. Therefore, the luminous transmission of a red filter will be lower when it is measured using a high color temperature source since a lower fraction of its emission is in the (red) band of the filter. Conversely, the luminous transmission of a green filter will be higher since a higher fraction of the lamp's emission is in the (green) band of the filter. It is, therefore, very important to specify the source used when determining a filter's transmission.

Transmission curves of the filters were obtained by taking spd's of a 35W tungsten-halogen headlight capsule using the Jarrell-Ash monochromator. The spectra of the lamp through the filters and of the bare lamp were then divided point-by-point to obtain the transmission curves. The luminous transmissions were obtained by running the spectra of the lamp both with and without the filters through OSI's colorimetry programs and taking the ratio of the lumens through the filters to that of the bare lamp. The results are displayed in Table 6-2. Note the disparity in the transmission values between the radiometric and photometric measurements, particularly in the red where the eye sensitivity is reduced.

TABLE 6-2. ABSOLUTE AND LUMINOUS TRANSMISSIONS OF THE BEACON FILTERS

Filter	Irradiance ($\mu w/cm^2$)	Percent Absolute Transmission	Illuminance (ft-cd)	Percent Luminous Transmission
None	782	100	11.4	100
Green	178	23	3.5	31
Yellow	589	75	7.2	63
Red	502	64	2.6	23

As an independent cross-check of the results, the OSI's Technical Assistance Laboratory at the Sylvania Lighting Center, Danvers, MA measured the spectral transmittance of the red beacon filter. The data were then convoluted with the visual response curve and with the theoretical spectrum of an incandescent lamp of the same color temperature as a typical Coast Guard lamp (2870K) to determine the luminous percent transmission. This method yielded a transmittance of 25%, in good agreement with other results.

The Coast Guard's published data present the transmissions of the beacon filters relative to that of the clear beacon lens. To validate the transmission values to reference 8, the 0.77 amp (9.25 watt) lamp was placed in a 155 mm beacon so that it was near the top conical section of the lens. A photometer was positioned in-line with the lens to measure the intensity through the clear 155 mm beacon lens and through the colored lenses. The transmissions were calculated by taking the ratios of the photometric measurement of the clear lens that of the colored lenses. The resulting values are presented in Table 6-3, below. These values are in good agreement with reference 8.

TABLE 6-3. TRANSMISSIONS OF BEACON FILTERS
RELATIVE TO THE CLEAR LENS

Lens	Reading (ft-cd)	Relative Percent Transmission	
		OSI	Coast Guard
Clear	12.8	100	100
Green	4.65	36	32
Yellow	8.81	69	65
Red	3.42	27	27

6.3 Life Testing

In the course of developing the LE/Ar lamps, a number of lamp samples constructed in different configurations were subjected to life tests to evaluate on-going engineering changes. The results of these interim tests are described below.

6.3.1 Elliptical Lamp Pulse Durability

A lamp operated in the Quick Flash (Q) mode for 12 hours a day will undergo almost 16 million flashes in a year. To determine the liquid electrode's ability to withstand this, a few of the original single-pass, elliptical lamps were operated on a low duty cycle pulse mode. The test was terminated at the end of the contract period, at which time none of the lamps had failed. The results are summarized in Table 6-4 below.

TABLE 6-4. SINGLE-PASS LE/AR LAMP LIFE TEST RESULTS

Lamp	Number of Pulses
HF4	4,576,200
IF3	15,153,500
IF4	14,669,200
JQ3	2,266,000
JS3	11,126,300
LR5	11,126,300

Capsules JS3 and LR5 were LE/Ne lamps. The remaining lamps were LE/Ar lamps.

These capsules were pulsed at an instantaneous power chosen to be several times the design power with a pulse duration of 0.1 second. More accurate measurements of the power and pulse width were not acquired. The lamps were pulsed from a single power source and sequenced so that each source was pulsed once every few seconds.

Periodically the capsules were examined for visible signs of electrode erosion. Throughout the test no visible darkening of the capsule walls was noted, indicating that the mercury was protecting the underlying electrode.

6.3.2 Linear Double-Bore Test

A set of double-bore lamps were put on a continuous-burn life test. The objective of the test was to evaluate the feasibility of this construction. These capsules were inherently fragile because of the extremely narrow inner bore. The tendency for the mercury to migrate and block the discharge path was symptomatic of the narrow-bore glass (Table 6-5). The test was stopped after the double-bore construction approach was rejected.

TABLE 6-5. DOUBLE-PASS LE/AR LAMP LIFE TEST RESULTS

Lamp	Hours	
DAr41	188	Hg migrated to 1 side. Retired.
DAr44	404	
DAr47	168	Hg migrated to 1 side. Retired.
DB5	404	

6.3.3 Helical Coil Lamp Life Tests

6.3.3.1 Epoxy-Sealed Jacket Test

Six helical-configuration LE/Ar lamps (3 green, 3 red) were phosphored and epoxied with glass jackets into plastic bases and put on life test. They were operated in continuous mode at approximately 5 watts with commercial AC ballasts manufactured by Oriel. Their photometry over life is plotted in Figure 6-1. After 2 days of operation, the phosphor coating on five of the lamps was discolored, turning grayish on the red lamps and a dirty brownish-gray on two of the green lamps. The discoloration and reduction in lumen output was attributed to a chemical reaction between the phosphor coating and the epoxy.

In addition, a leg on one of the red lamps broke during handling and two of the green lamps developed small cracks in the legs, causing them to leak. The failures were attributed to the stress caused by the curing of the epoxy.

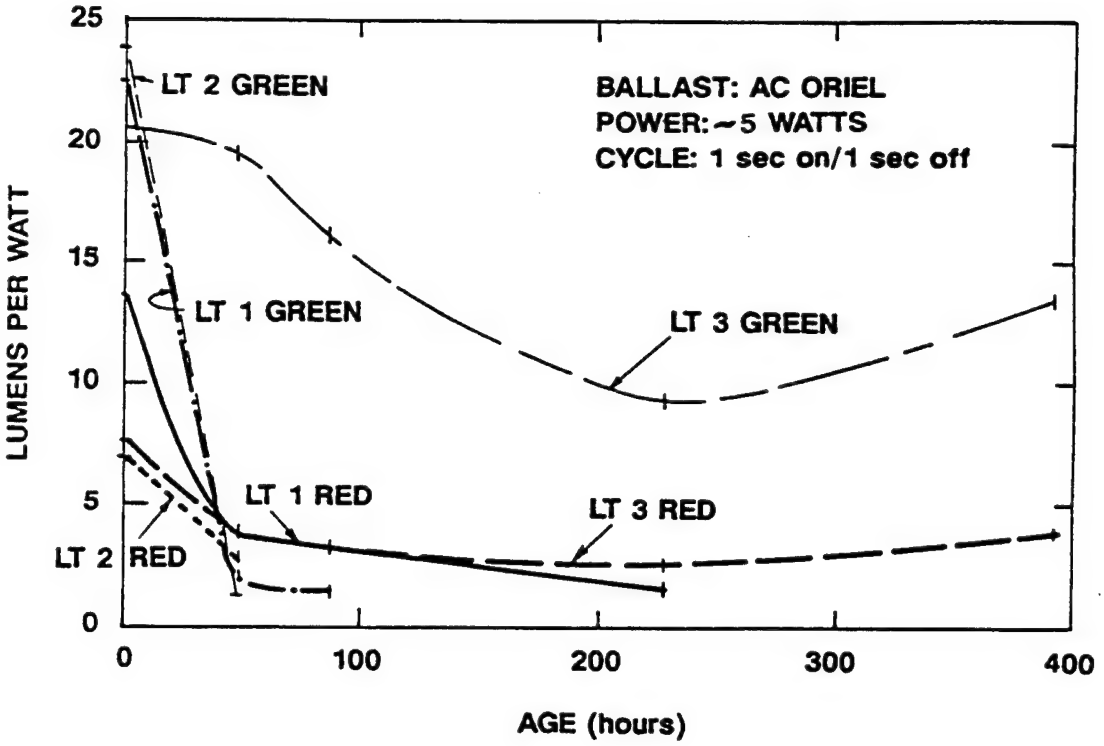

Figure 6-1. Efficacy vs. Age for LE/Ar Lamps with Phosphor in Epoxied Jackets

This test was suspended and subsequent samples were constructed with sealed outer glass jackets to avoid any possible interaction of the phosphor with epoxy and avoid stress with the glass leads of the capsule.

6.3.3.2 Unjacketed and Unphosphored Test

To further isolate the various components of lamp performance, a set of bare arc tubes was started on a life test. They were operated with AC power supplies with a 0.4 second "on", 0.4 second "off" duty cycle. Photometric measurements were made of the visible mercury emission and is plotted in Figure 6-2. The data show no significant degradation in performance after 70 hours (1,855,000 pulses) of operation. The data suggested that the observed degradation in lumen maintenance of the phosphor tests was not a result of any degradation in the emission properties of the discharge.

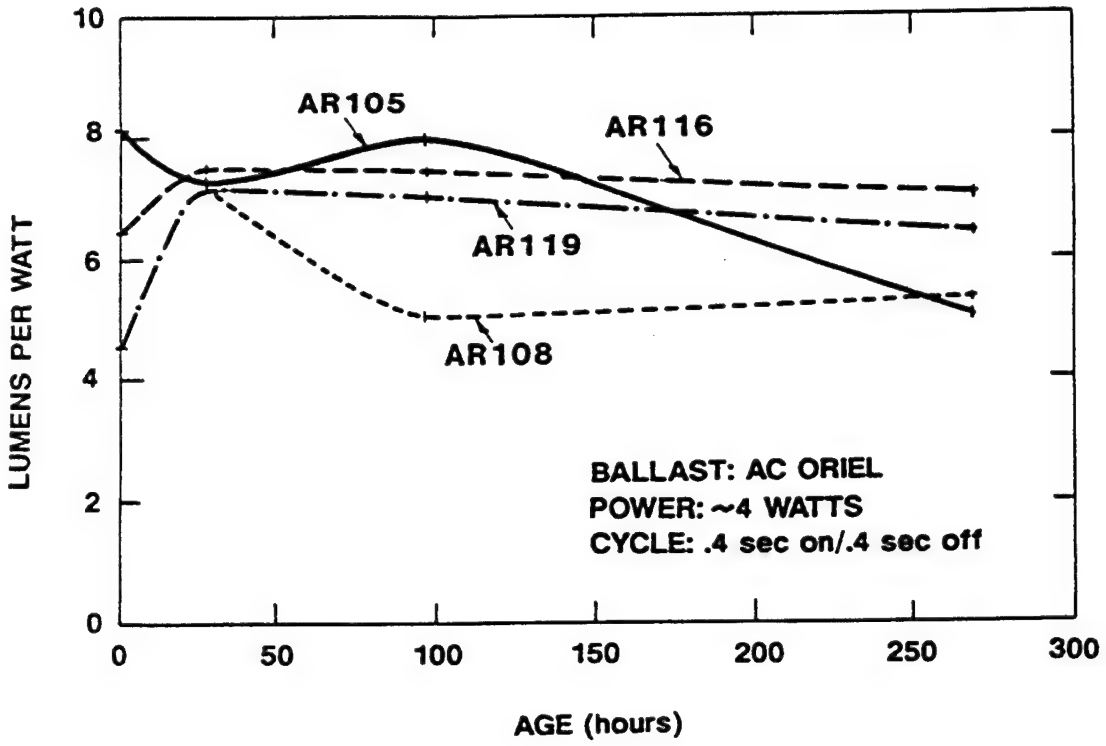

Figure 6-2. Efficacy vs. Age of LE/Ar Lamps Without Phosphor

6.3.3.3 Phosphored, Unjacketed Test

A group of coiled, phosphored LE/Ar lamps operating on the AC ballasts showed a significant degradation in maintenance. Since these lamps did not have outer jackets, a probable cause was moisture in the air binding with and altering the glass resin binder. Moisture can be removed from the phosphor by heating. Therefore, the lamps were baked-out at approximately 800° C for 10 minutes, which turned the phosphor/glass resin white again. This increased the lamps' output to 82% of their initial output. These results are plotted in Figure 6-3.

6.3.3.4 Phosphored Gas-Filled Jacket Test

An inert gas backfill is generally recommended for operation with phosphors. A test was started consisting of two lamps with 400 torr of nitrogen in the outer jacket and two with

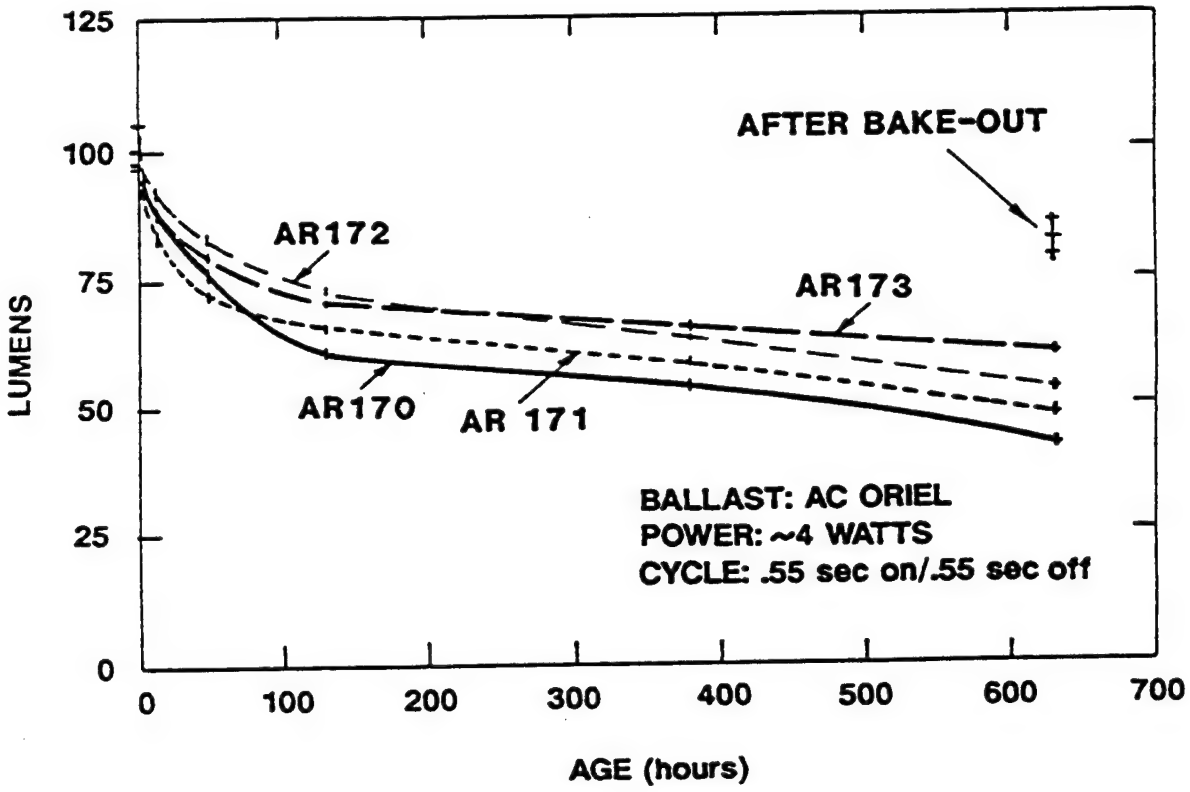

Figure 6-3. Lumen Output vs. Age for Reduced Mercury LE/Ar Lamps with 2285 Green Phosphor Without Outer Jacket

about 2 atmospheres of argon. The argon was included to test if higher pressures help to cool the lamp and improve performance. These lamps were put on life test with the Oriel AC ballasts, running at a one second "on" and one second "off" cycle.

After approximately 61 hours of "on" time, the light output had dropped to an average of 47% of its initial value and the phosphor was beginning to turn grayish. The condition was assessed to be reduction of the SiO additive in the phosphor to Si. To verify this condition the glass jackets were carefully cut open to vent the interior and then heated to 117° C in an air oven for about 2 hours. This procedure is commonly used to restore oxygen-deficient phosphor coatings. After this treatment the lamps were photometered

and the output increased an average of 34%. Based on this result the outer jacket gas was chosen to be dry air (20% oxygen and 80% nitrogen).

The increased pressure in the outer jacket was not pursued because the preliminary visible examination indicated no effect on lamp operation.

6.3.3.5 Prototype Lamp Reliability Tests

A set of lamps was placed on an extended life test at OSI to determine compliance with the reliability requirements of the contract. The lamps achieved the following results:

TABLE 6-6. LAMP RELIABILITY TEST SUMMARY

	Lamp	**Power Supply**
Total Hours (T) hrs.	8912	8912
n (=2*#of failures) + 2	4	2
X^2 for a=0.05	9.488	5.9915
MTBF (=$2T/X^2$) hrs.	1879	2975

The lamps were given a pre-test burn-in of 48 hours prior to start of the test to minimize infant mortalities. It is very interesting to note the immediate drop in intensity of the lamps from the beginning pre-test to the start of the test.

The one failure during the test occurred in lamp G009 at 607 hours. Lamp G023 did not fail, however was noted as operating in an unstable fashion at the 970 hour reading. The test was terminated as the term of the contract had been expired. The desired MTBF of the system of 8000 hours was not proved in the test, however the test did provide an interesting piece of information on the performance of the phosphor. Lamps G049 and G050 of the final design in the contract effort, maintained 40% of the original lumen output for 1600 hours, as compared to a lumen maintenance of 16% output at 1600 hours for the other four lamps that operated the throughout the test. Table 6-7 is a summary of all measurements made in the reliability test.

TABLE 6-7. RELIABILITY TEST PHOTOMETRY DATA

				Lumens						
Hours	**PreTest**	**0**	**169**	**437**	**607**	**801**	**970**	**1290**	**1474**	**1661**
G034	75	42	23	24	21	19	18	17	15	12
G050	84	60	45	50	46	43	40	39	37	36
G028	61	34	22	18	14	14	13	11	11	9
G049	67	58	51	47	45	44	42	35	33	32
G009	68	44	27	25	FAIL	NA	NA	NA	NA	NA
G023	66	NA	NA	NA	17	19	Not Stable	13	10	8
G024	NA	40	26	19	68	16	14	13	12	10
				CCT(K)						
Hours	**PreTest**	**0**	**169**	**437**	**607**	**801**	**970**	**1290**	**1474**	**1661**
G034	6721	7204	6924	7130	7098	7458	7380	7058	7411	7388
G050	6747	6884	6835	7025	6882	7100	6949	6902	6958	6980
G028	6844	6720	7066	7212	7368	7739	7408	7451	7419	7415
G049	6824	6750	6781	6738	6904	6693	6849	6784	6733	6802
G009	6821	6749	7245	6652	FAIL	NA	NA	NA	NA	NA
G023	6899	NA	NA	NA	6880	7523	Not Stable	7676	7738	8186
G024	NA	6692	7372	7440	7547	7608	7790	7513	7373	7690
				x						
Hours	**PreTest**	**0**	**169**	**437**	**607**	**801**	**970**	**1290**	**1474**	**1661**
G034	0.2616	0.2566	0.2625	0.2637	0.2641	0.2584	0.2608	0.26	0.255	0.2586
G050	0.2617	0.2594	0.262	0.2596	0.2639	0.2588	0.2627	0.265	0.261	0.2574
G028	0.263	0.2666	0.2642	0.2652	0.266	0.2621	0.2656	0.2659	0.265	0.2587
G049	0.2608	0.2612	0.2629	0.2646	0.2608	0.2685	0.264	0.266	0.267	0.2612
G009	0.259	0.2638	0.2575	0.2716	FAIL	NA	NA	NA	NA	NA
G023	0.264	NA	NA	NA	0.2632	0.2654	Not Stable	0.266	0.265	0.2549
G024	NA	0.2689	0.2622	0.2624	0.2634	0.2628	0.26	0.268	0.268	0.2586
				y						
Hours	**PreTest**	**0**	**169**	**437**	**607**	**801**	**970**	**1290**	**1474**	**1661**
G034	0.6078	0.518	0.547	0.4998	0.5034	0.4725	0.4736	0.5302	0.4921	0.4813
G050	0.5991	0.5728	0.5721	0.5391	0.5497	0.5275	0.5403	0.5391	0.5466	0.5595
G028	0.5644	0.5788	0.5092	0.4799	0.4545	0.4286	0.4511	0.4449	0.4522	0.4771
G049	0.5818	0.6008	0.582	0.5851	0.5606	0.5755	0.5575	0.5635	0.5725	0.5854
G009	0.5923	0.5864	0.5076	0.5694	FAIL	NA	NA	NA	NA	NA
G023	0.5452	NA	NA	NA	0.5542	0.4386	Not Stable	0.4211	0.4188	0.4149
G024	NA	0.5732	0.4693	0.4598	0.4434	0.439	0.4308	0.43	0.446	0.4453

6.3.3.6 Post-Delivery Coiled LE/Ar Lamp System Life Test

Following delivery of the first set of prototype coiled, LE/Ar lamps, four lamps were placed on an extended life test in the laboratory at the U.S. Coast Guard Research and Development Center in Groton CT. Two green (Lamp/Ballast S/N G004/6 and G007/16) and two red (Lamp/Ballast S/N R003/3 and R006/10) were energized on November 11, 1991. Lamps G007 and R003 were tested on an ultra-quick flash setting (ISO 0.8). The other two lamps were set on a fixed-on mode. As of May 23, 1996, the lamps had been run 39,720 hours continuously. The flashing lamps had been pulsed approximately 360 million times with no failure other than in lumen maintenance. The lamps' visible lumen output decreased approximately 75% within the first month of operation, due to a photo-degradation in the phosphor that was confirmed in a later analysis performed by OSI. The remaining light produced by the phosphor was no more than the visible portion of the mercury emission.

6.4 Environmental Testing

6.4.1 Preliminary Temperature Testing

6.4.1.1 Low Temperature Tests

A sample double-bore LE/Ar lamp was sent to OSI's Tests & Measurements Department for temperature evaluation. Lamp performance was evaluated at the high and low temperature extremes (+60° C and -40° C). The lamp was operated using a 60 Hz AC power supply with 120V input voltage and visually evaluated for brightness and rise time as compared to its performance at room temperature. At 60° C the lamp lit without trouble and took about 30 seconds to stabilize. At -40° C, the lamp was initially dim blue and turned green, reaching its full room temperature brightness over a period of about 3 minutes.

A low temperature test was performed on the high-mercury-dose coiled lamps and power supplies in a refrigeration chamber in the laboratory at OSI's Salem facility. At -30° C, the

lamps ran quite well when run continuously, but became dim when run in a flashed mode. To determine if reducing the fill gas pressure would improve the lamps' low-temperature performance, several different combinations of fill gas pressure and mercury dosage were tested.

One configuration involved operating two LE/Ar lamps with 20 torr of argon fill gas at -30° C in both the 0.3 second "on," 2.5 second period flash pattern and in the fixed-on modes in the refrigerator. In both cases, the output of the lamps was very poor.

Another configuration was attempted with two reduced-mercury lamps with 40 torr of fill gas. Although it operated, the lamps had significantly reduced lumen output when operated in fixed-on mode in the refrigerator.

A third configuration involved lamps were fabricated with 10 torr and 5 torr of fill gas and reduced mercury. The 5 torr lamps would not stabilize on the 17.5 kHz Garrison power supply. The 10 torr lamps were put into the refrigerator. The lamps energized quickly at -30° C in both pulsed and fixed-on operation and were only slightly dimmer than at room temperature. However, the low pressure lamps seemed to have stability problems running at room temperature in several modes of operation (as determined from the voltage waveform) and tended to flicker.

Considering the results of the pressure/fill gas tests, the research team concluded that the 40 torr fill gas pressure was optimal.

6.4.1.2 High Temperature Test

A preliminary high temperature test was performed on a coiled lamp and power supply in a convection air oven. At +60° C, the lamp ran quite well when operated in a flashed mode.

6.4.2 Formal Testing

A critical requirement for Phase II work was fabrication of a lamp system capable of withstanding the harsh marine environment. All lamps tested were of the final prototype LE/Ar, helical-coiled design as previously discussed herein. The required tests were performed according to MIL-STD-810E. A specific test sequence was followed in accordance with the test plan. All operational performance tests were performed using a 30 kHz AC power supply uniquely designed by GTE Sylvania and Garrison Machine and Electronics. The power supply consisted of a controller board containing the logic for the flash patterns and the day/night on/off control. It also contained a board that converted 12 VDC input to 24 VAC at 30 kHz. Six lamps (3 green, 3 red) were subjected to a lumen life test. Twelve green lamps and six power supplies were subjected to environmental qualification testing.

The summary of tests results provided in the subsequent paragraphs include, where possible, a discussion of any cause and effect relationship between the testing and the subsequent performance of the device under test (DUT). The device under test (DUT) consisted of a lamp (with an integral step-up power transformer in its base) and a power supply/flasher assembly.

The DUTs were subjected to both pre- and post-test operational evaluations as per requirements within MIL-STD-810E, Test Methods, 5.2.1.

The DUTs were subjected to the following sequence of tests:

Vibration:	MIL-STD-810E Method 514.4 Test Procedure I Test Conditions I-3.4.9 Category 10 Minimum Integrity Test - General
Shock:	MIL-STD-810E Method 516.4 Test Procedure VI
High Temperature:	MIL-STD-810E Method 501.3 Test Procedure II Test Conditions - Requirements Document
Low Temperature:	MIL-STD-810E Method 502.3 Test Procedure II Test Conditions - Requirements Document

Upon completion of the preceding listed tests, the tested items were separated into two groups; one group consisted of three test items, and the other group consisted of six items. The first group was combined with three test items (which had not undergone any prior environmental tests) to comprise a salt fog test group of six test items. The Salt Fog test was accomplihed in accordance with MIL-STD-810E, Method 509.3, Procedure I. The second test item group was subjected to the humidity test in accordance with MIL-STD-810E, Method 507.3, Procedure III.

The test chronology was based upon the intent to evaluate the cumulative environmental effects of vibration and other environments as per MIL-STD-810E, Method 514.4, I-3, c. Sequence and Method 516.4, I-3, c. Sequence while observing the caution expressed in Method 509.3, I-3, c. Sequence . While Method 509.3, I-3, c. Sequence indicates that salt fog testing is generally not to be performed on previously tested samples, the test item life cycle would be appropriately represented by test items being exposed to Sequence I followed by salt fog exposure.

6.4.2.1 Pre-Test Evaluations (Spectrophotometry)

The pre-test evaluation consisted of spectrophotometry and electrical input parameter measurements, initial (prior to any environmental testing), at the conclusion of shock/vibration testing and at the conclusion of all environmental tests. The comparison of spectrophotometry before and after each of the test procedures outlined above indentified the potential problem areas for the DUT. Clearly, vibration had a large effect on the lumens and color of the source. This was due to the loss of phosphor from the discharge tube exterior walls. This affected light output in two ways. First, light output from the phosphor was reduced and its chromaticity contribution was also reduced. Second, gaseous discharge components contributed more to the light output due to decreased phosphor absorption or increased transmittance through the wall of the discharge tube. Both of these effects tended to decrease lumens and increase color temperature. The environmental tests had minimal permanent effect on the light output of the DUT's. Although the relative light output of the DUT's did change with low and high

temperature exposure time, there was no measurable change in light output before and after the exposure periods. This may indicate that the DUT is temperature sensitive with a long time constant; such behavior has been seen on narrow bore fluorescent lamps. However, from the test results it could not be determined if a similar effect is taking place in the test units.

6.4.2.2 Vibration Testing

6.4.2.2.1 Vibration Test Description

Vibration tests were accomplished in accordance with MIL-STD-810-E Reference: 514.4, Procedures I & V, Conditions I-3.4.9 Category 10, Minimum Integrity Test - General. The acceleration profile complied with Figure 514.4-16, *Minimum Integrity Test - General* of MIL-STD-810E. The test duration was one hour per axis. Accelerometers were located on the test item and the shaker table. Vibration was controlled to within 3db throughout the test with no more than five frequency spectral bands exceeding the limits and no more than three repeated exceptions on any band.

The test item was evaluated in the same orientations as in the shock test. A rigid fixture was used to mount the test item in the operating positions for testing along all three axes. The test item was not operated during testing as the test conditions were not intended to reflect normal service conditions.

The lamps were subjected to vibration testing according to method 514.2, Procedure X, Curve AX 2.5g. This test was performed on a Ling shaker table Model 390 controlled by a Hewlett Packard 9000 Series 300 computer. In the test, the system is secured to the shaker table which was then vibrated vertically with 2.5 gravities acceleration. The frequency was varied from 5 Hz to 200 Hz to 5 Hz over a period of 12 minutes. The test was performed with the lamps mounted both vertically, based down, and horizontally. the lamps were test lighted after vibration in each of the three positions.

6.4.2.2.2 Vibration Test Results

Several problems surfaced in vibration testing. First, the support wire on the end of the discharge tube failed in several lamps. This failure may be partially due to overtest in this part of the DUT. Due to the limitations of attaching accelerometers for control to the DUT ballast housing or the DUT lamp envelope, control accelerometers were affixed to the fixture. Given the structure of the lamp and ballast housing, particularly the snap fit and single screw hold down, it was considered possible that resonance-like excitation of structures may have resulted in greater deflections at the support wire than would have occurred by the selected vibration demand spectrum.

Second, phosphor adhesion was determined to be poor given the mechanical stresses being induced by vibration. The summary of spectrophotometry clearly indicates a 37% drop in lumens following vibration.

Third, a ballast failure mode was identified. The crystal timing oscillator on the circuit board was becoming detached due to fatigue of the leads at the surface of the circuit board. This was corrected and the corrected ballasts passed without a re-occurrence of this failure mode.

Fourth, the retaining screw was found to back out at the vibration levels of the test in several instances. This was considered to be both a potential field problem and one that could lead to overstress of the lamp during testing if the lamp resonated differently when loose as opposed to tightly clamped.

6.4.2.3 Shock Testing

6.4.2.3.1 Shock Test Description

Shock tests were performed in accordance with MIL-STD-810-E Reference: 516.4, Section II-3.6, Procedure VI. The test verified the lamp's ability to withstand shocks encountered during servicing. The lamp was shock tested while oriented vertically and horizontally. The orientations were accomplished by either affixing the bottom or one side

of the power supply to a 6 inch-square, 1/16 inch thick aluminum plate. The plate was mounted to a 1 5/8 inch thick wooden bench top, by a pivoting hinge on one side. The test involved raising the edge of the plate opposite to the pivot four inches (~ 45 degrees to horizontal) above the bench top and releasing it.

6.4.2.3.2 Shock Test Results

The DUT's were operational following the shock test. One unit was observed to have a broken support wire at the top of the quartz coil upon shock test post-inspection. It was considered likely that this was due to previous vibration testing but that the defect was not discovered at that time or that the defect was imminent following the vibration testing and that the shock caused the defect to appear due to the effect of the cumulative stress on the support wire. One DUT did have phosphor from the outer surface of the discharge tube separate from the tube during the shock test. This indicated that shock could affect the light output of a DUT due to the mechanical stress at the phosphor coating/discharge tube interface resulting in detached phosphor.

6.4.2.4 High Temperature Testing

6.4.2.4.1 High Temperature Test Description

High temperature tests were performed in accordance with MIL-STD-810-E Reference: 502.3, Section I-3.1.3.2, Procedure II, Operation b, Constant Temperature Exposure. The tests were performed in an environmental chamber manufactured by Cincinnati Sub-Zero Products, Inc. (Model CTH-32-705-705-F/WC).

The procedure followed first involved raising the test chamber temperature to 60° C. Following a 45 minute soak period, the test item was operated continuously in the FIXED ON setting for the test duration. Relative light output and electrical parameters were monitored throughout the high temperature testing and was recorded on four hour intervals. the chamber was kept at 60° C for 24 hours. The temperature was then brought

back to room temperature, at which time the test item was removed from the chamber and post-test measurements and inspections were performed.

6.4.2.4.2 High Temperature Test Results

The DUT's were operational following the high temperature test. No abnormal behavior of the DUT's was observed. The integrated, input electrical parameters of the nine DUT's under test were recorded throughout the high temperature test cycle. Input voltage remained constant. Input amps decreased by approximately 10% over the first one and one-half hours and then remained relatively constant throughout the test. The relative light output of one DUT (lamp G020) was monitored throughout the test and decreased smoothly to about 55% of initial output by the end of the test. All measurements were recorded at 15 minute intervals.

6.4.2.5 Low Temperature Testing

6.4.2.5.1 Low Temperature Test Description

The test items were evaluated in accordance with MIL-STD-810-E Reference: 501.3, Section I-3.1.3.2, Procedure II, Operation b, Constant Temperature Exposure. The same test chamber was used as used in the High Temperature Test.

In this test, the test chamber temperature was brought down to a temperature of -40° C. Following a 45 minute stabilization period, the test item was energized and operated continuously on the FL 6(.6) setting for 24 hours. Relative light output and electrical parameters were monitored throughout the low temperature test and were recorded at four hour intervals. At the completion of the 24 hours, the test chamber was allowed to warm to room temperature and the test item was removed. Post-test measurements and inspections were performed at that time.

6.4.2.5.2 Low Temperature Test Results

The DUT's were operational following the low temperature test. The integrated, input electrical parameters of the nine DUT's under test were recorded throughout the low

temperature test cycle. Input volts were constant. Integrated, input current and power seemed to indicate a bimodal behavior of one or more DUT's prior to approximately 765 minutes into the test. At that point, the current and wattage made step changes to higher values with smooth variation which did not have the bimodal appearance of the earlier variations. These changes were not reflected in the relative light output measurement which demonstrated a smooth, monotonic 7% drop in light output over the test time. This was considered to be due to the fact that one DUT (Lamp G029) was flickering as recorded by visual inspection. Lamp G020 was the lamp monitored for relative light output. Consequently, correlation between the electrical variations and the relative light output was not expected. The relative light output was approximately 50% of the light output at high temperature. The socket from the ballast 017 was pulled from the ballast housing upon normal removal of the lamp at the completion of testing.

6.4.2.6 Humidity Testing

6.4.2.6.1 Humidity Test Description

The humidity test was performed in accordance with MIL-STD-810-E Reference: 507.3, i-3.1c, Section II-3.3, Procedure III - Aggravated and I-3.3, Procedure III - Aggravated. The test was run in the same environmental chamber as used for temperature tests. Each cycle was 24 hours, and a total of 10 cycles were performed. The test items were operated at the completion of the fifth and tenth cycle. Post-test evaluation was performed.

The following test protocol was performed:

1. Over a period of two hours, the chamber temperature was raised to 60° C and 95% relative humidity. The environment was maintained for 6 hours.

2. The chamber temperature was decreased to 30° C over an eight hour period. The environment was maintained for four hours.

3. Steps 1 and 2 were repeated 10 times.

4. Near the end of the fifth and tenth cycles, while still at 30° C, the lamps were test-lighted.

6.4.2.6.2 Humidity Test Results

The DUT's were operational following the fifth and the final humidity cycles. The lamp, G019, of one DUT had accumulated water in the jacket. The jacket was approximately one-third full of water. The same DUT's ballast, 020, had approximately 5 ml of water in the ballast. This lamp, G019, was broken before identification of the cause of the water accumulation could be made.

6.4.2.7 Salt Fog Exposure Testing

6.4.2.7.1 Salt Fog Exposure Test Description

The Salt Fog Exposure test was conducted in accordance with MIL-STD-810-E Reference: 509.3, Procedure I. The test was conducted in an Albert Singleton Corporation Model 21 Salt Fog Chamber. The salt solution concentration was 5% +/- 1% as determined by specific gravity. The solution's pH was held at pH 7.0 +2.0/-0.5. Chamber temperature was maintained at 95° F. The water resistivity was held at 250 kohms/cm. The salt fog fallout was maintained between 0.5 and 3.0 ml/80cm^2/hr. The salt fog fallout rate and the pH of the fallout was measured and reported every 12 hours. These conditions were maintained for 48 hours. At the end of this time, the test item was dried for 48 hours prior to post-test evaluation.

6.4.2.7.2 Salt Fog Exposure Test Results

The results of the salt fog exposure testing varied with the DUT. Two DUTs, G011/21 and G035/023, lit normally upon completion of the testing. Three DUTs, G020/018 and G040/019, lit but took approximately 2 minutes to reach normal light output. One DUT, G038/020, did not light. Upon inspection it was found that the ballast-to-lamp leads had been crimped in the ballast housing seal following ballast inspection after the humidity testing. The corresponding test data sheet recommended that the electrical leads be

positioned to avoid this. One DUT, G026/012, did not light upon completion of salt fog exposure. Water was found inside the ballast housing. Inspection revealed that there was a tear in the ballast housing rubber seal at one corner. The DUTs which failed to light were due to pre-existing conditions, i.e., failure to properly position the lead wires and a tear in the seal as opposed to a corrosive effect. The wire positioning was definitely technician error. The seal tear was probably caused during initial assembly. All DUTs without one of these initial problems passed the salt fog exposure criteria.

6.4.2.8 Performance in Beacon

6.4.2.8.1 Beacon Performance Test Description

The complete source assembly was tested in the 155 mm beacon supplied by the Coast Guard. the beacon and lamp assembly was mounted in a type B manual goniometer. The mean horizontal intensity of the lamps in the beacon was measured from 25 feet away using a Silicon Detector Corporation Model SD444-31-2 photodiode with a photopic filter. this was calibrated using a Topcon IM3 photometer. For ease of measurement, the lamps were run in the FIXED ON mode of operation.

The intensity of the lamp was measured with the beacon rotated in two degree increments to determine that the intensity did not drop below 50% of the required minimum values due to tip-of or mounting parts. The mean horizontal intensity (MHI) was taken to be the average of the measurements along the center axis of the beam.

The vertical divergence of the beam was measured at one rotation angle. It was defined as the angle at which the intensityis one half of the peak intensity at that point.

The input voltage to the lamp power supply was varied from 10V to 18V with the lamp running to verify its operation over that range in accordance with the contract specification.

The entire assembly, including the lamp, power supply, detector and beacon was weighed to verify that the total assembly weighed no more than 30 pounds in accordance with the contract specification.

6.4.2.8.2 Beacon Performance Test Results

Each of three DUTs was mounted in the beacon provided and intensity distribution measurements were made. The distributions about the horizontal for the three DUT's had an average range of candela values of 10%. Vertical divergence was measured at the 0 degree horizontal position for each DUT. The average vertical divergence was +7.7/-8.7 degrees. The average Mean Horizontal Intensity (MHI) for the three DUT's was 26.1 +/-3.6 cd. The MHI's of the individual units (lamp/base) are: G012/022, 23.3 +/-0.9 cd; G027/022, 24.8 +/-0.7 cd; and G030/022, 30.2 +/-1.2 cd. Horizontal and vertical distribution plots depicting lamp intensity profiles are included in Figures 6-4 to 6-9.

6.4.2.9 Flash Capability Test

6.4.2.9.1 Flash Capability Test Description

A special lamp which permitted access to the lamp leads flashed in each of the eight patterns described below, using the LE/Ar lamp power supply designed by GTE under the contract. The flash patterns were verified against those described in the COMDINST M16500.3, Aids to Navigation Technical Manual, Chapter 6, page 6-52. The lamp was timed for 100 flash cycles at each setting to verify the accuracy of the clock in the controller circuit.

Switch Position	Pattern
0	FIXED
1	ISO 6
2	Fl 4(.4)
3	Fl 6(.6)
4	Fl 2.5(.3)
5	Q
6	UQ
7	Mo (A)

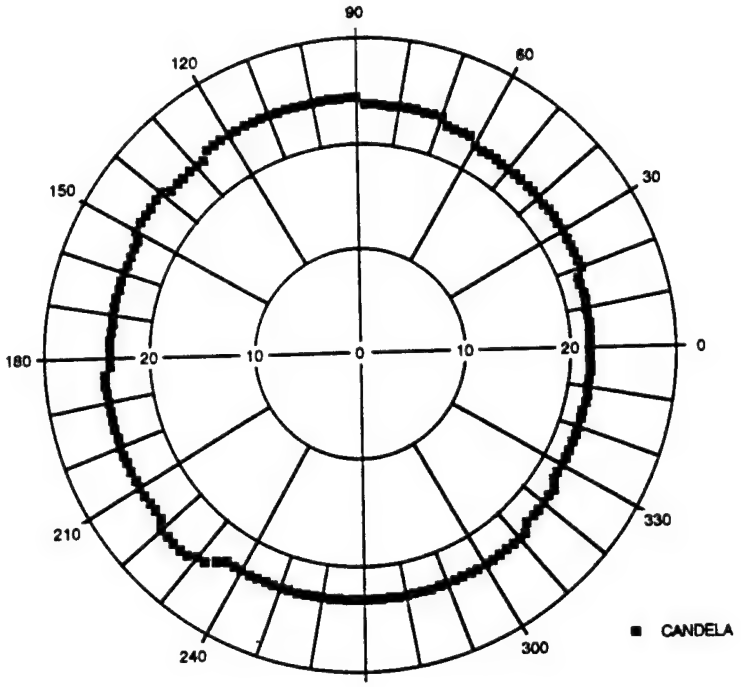

Figure 6-4. Horizontal Luminous Intensity Profile of Lamp S/N G012

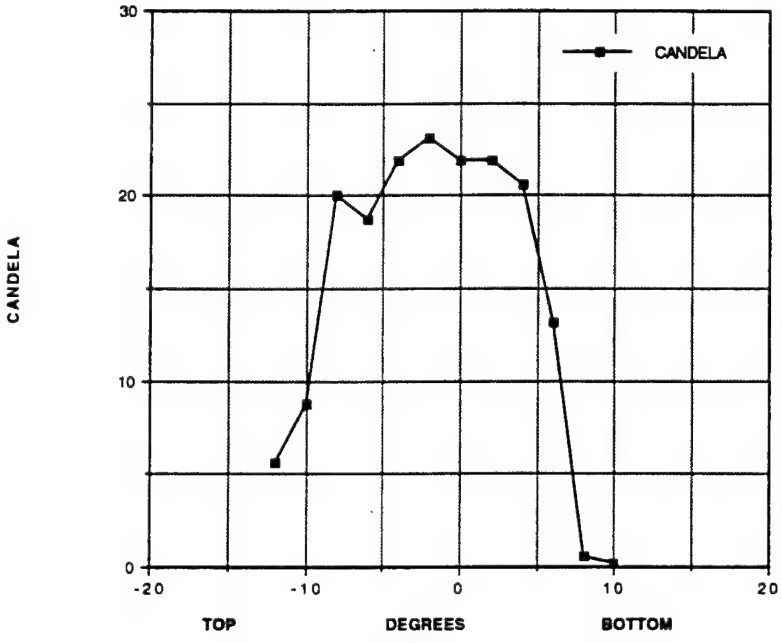

Figure 6-5. Vertical Luminous Intensity Profile of Lamp G012

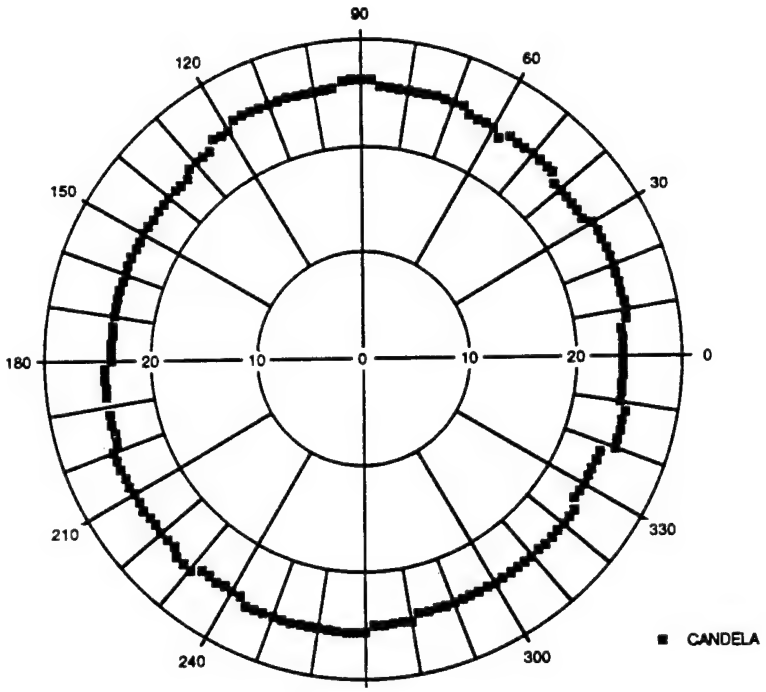

Figure 6-6. Horizontal Luminous Intensity Profile of Lamp S/N G027

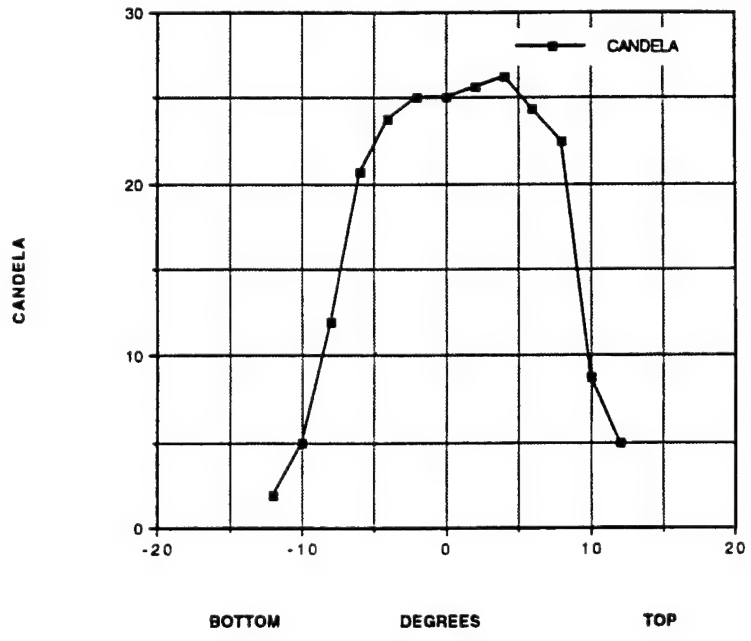

Figure 6-7. Vertical Luminous Intensity Profile of Lamp G027

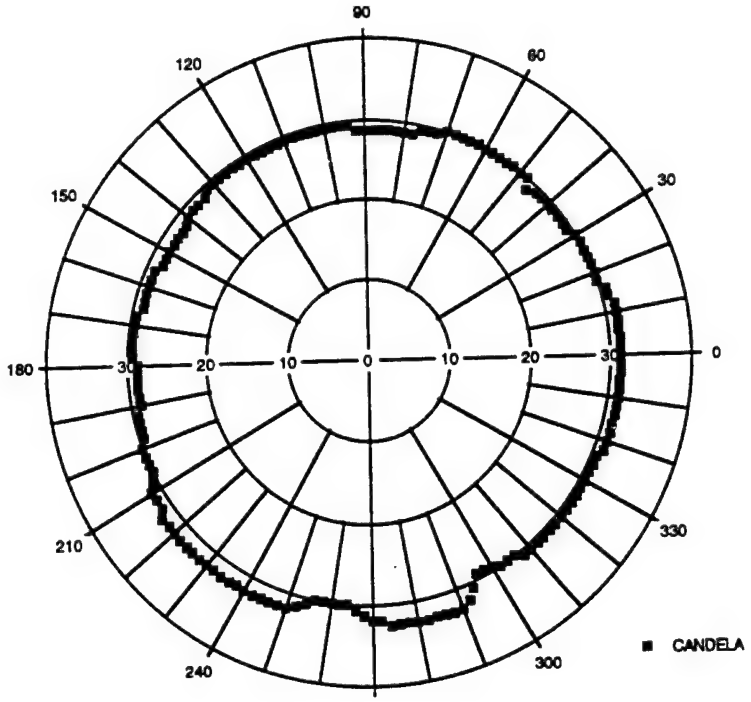

Figure 6-8. Horizontal Luminous Intensity Profile of Lamp S/N G030

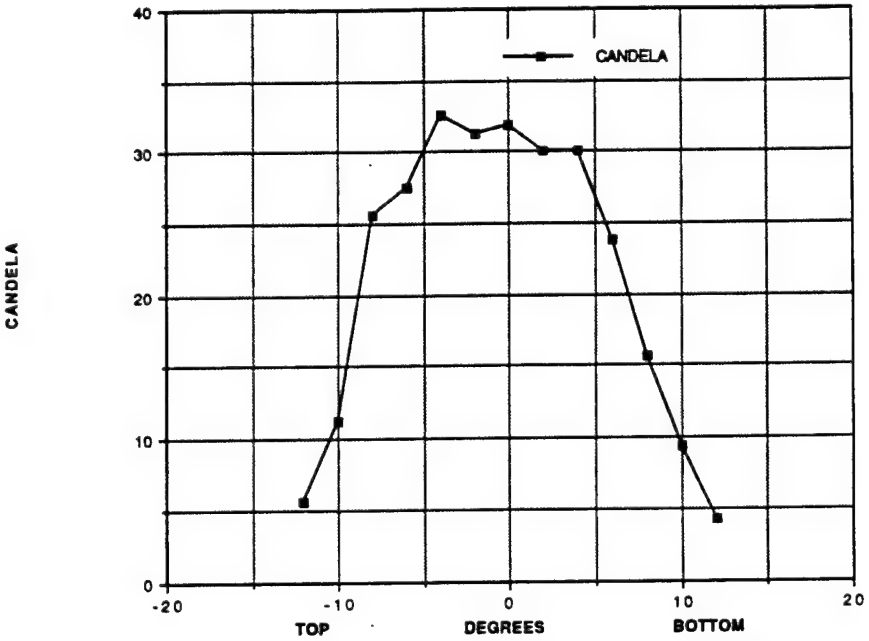

Figure 6-9. Vertical Luminous Intensity Profile of Lamp G030

6.4.2.9.2 Flash Capability Test Results

Ballast G019 was tested. Each flash pattern was selected and averaged for 100 flashes. The test equipment used included a Tektonix 7854 Oscilloscope, a Tektonix 7A13 Differential Input, and a Tektonix 7A26 Dual Trace Input. Pertinent pulse parameters were recorded. The results were as follows:

TABLE 6-8. SUMMARY OF LE/AR LAMP FLASH CAPABILITY TEST

Pulse Type	Pulse On Time	Pulse Off Time	Pulse Cycle Time	Second Pulse On Time
ISO 6	2.98	3.02	6.00	
Fl4(0.4)	0.41	3.61	4.02	
Fl6(0.6)	0.59	5.41	6.00	
Fl2.5(0.3)	0.31	2.21	2.51	
Q	0.30	0.70	1.01	
UQ	0.35	0.05	0.40	
Mo(A)	0.43	0.60	3.02	2.00

6.4.2.10 Efficiency Test

6.4.2.10.1 Efficiency Test Description

The lamps' lumen output and chromaticity coordinates were measured using the following equipment:

1. Perkin Elmer E-1 Spectroradiometer
2. 1 Meter Integrating Sphere
3. JY Spectroradiometer (Model DH-10)
4. NIST Traceable Spectroradiometric Flux Standards
5. YEW Model 2533 DC/AC Watt meter

The lamp and power supply assembly was mounted in the integrating sphere. The DC power supply was set to 12.0 volts DC. The input electrical parameters (volts, amps, watts) of the lamp/power supply system was measured. the lamp was allowed to warm-up for five minutes before any measurements were taken. Sphere corrections for absorbance of the test item was made. It was noted that this would be lower than the efficacy of the lamp alone since any losses due to the power supply would also be included. Chromaticity coordinates were calculated as per CIE Publication 15, 1971, *Colorimetry*.

The efficiency of the pulsing circuit was also evaluated. To do this, the circuit was connected to a 12 volt DC power supply and to a lamp which was connected to the high voltage transformer and current coil, but not potted into the base. The output voltage was measured by placing a Tektronix isolator voltage probe across the lamp inlead wires and displaying the

6.4.2.10.2 Efficiency Test Results

Two ballasts were tested for efficiency using the special lamp provided. The lamp was a nominal design lamp with exposed leads for lamp voltage, current and power measurement. Ballast 019 efficiency was determined to be 55% when operating on ISO 6. Ballast 023 efficiency was determined to be 58% when on continuous operation. The efficiency test is summarized in below.

TABLE 6-9. SUMMARY OF LE/AR EFFICIENCY TEST

Pulse Type	Ballast	Lamp	Input Volts (Vdc)	Input Current (A)	Input Watts	Lamp Watts	Efficiency
ISO 6	19	Special	12.00	0.342	4.104	2.11	51.4%
Fixed	23	Special	12.00	0.319	3.828	2.38	62.2%

6.4.2.10.3 Spectrophotometry Data of Test Lamps

Spectrophotometry data of test lamps are summarized in Table 6-10.

TABLE 6-10. SUMMARY OF TEST LAMP SPECTROPHOTOMETRY DATA

Lamp	Initial Readings x	Initial Readings y	Initial Readings Lumens	Post Shock/Vibration Readings x	Post Shock/Vibration Readings y	Post Shock/Vibration Readings Lumens	Post Environmental Readings x	Post Environmental Readings y	Post Environmental Readings Lumens
G011				0.2562	0.5251	51	0.2618	0.5436	53
G012				0.2580	0.5438	55			
G014	0.2557	0.5568	68						
G015	0.2554	0.5538	61						
G016	0.2557	0.6126	54	0.2549	0.5445	36	0.2602	0.5075	33
G017	0.2566	0.5976	64	0.2580	0.5605	47	0.2668	0.5904	44
G018	0.2575	0.5652	64						
G019	0.2534	0.5933	88	0.2568	0.5519	45			
G020	0.2584	0.5673	64	0.2633	0.5280	32	0.2708	0.5126	29
G021	0.2555	0.5813	72	0.2574	0.5551	45	0.2634	0.5473	44
G025	0.2521	0.5930	65						
G026	0.2530	0.5930	84	0.2555	0.5724	54	0.2717	0.6085	51
G027				0.2579	0.5534	62			
G029	0.2609	0.5926	60	0.2656	0.6211	46	0.2690	0.6006	50
G030				0.2627	0.5877	53			
G031	0.2568	0.5706	61						
G033	0.2536	0.5955	76						
G035	0.2536	0.5942	77	0.2569	0.5404	42	0.2644	0.5638	44
G037	0.2604	0.5972	60	0.2577	0.5592	45			
G038	0.2560	0.5749	71	0.2590	0.5769	68	0.2652	0.5804	75
G039	0.2558	0.5885	64						
G040				0.2565	0.5575	62	0.2641	0.5645	62
G041	0.2575	0.5630	56						
Average	0.2560	0.5828	67	0.2584	0.5585	50	0.2657	0.5619	49
Std.Dev.	0.0024	0.0167	9	0.0030	0.0233	9	0.0038	0.0346	13

Comparison of :	Delta x	Delta y	Delta Lumens	% Change Lumens
Initial and Post Shock/Vibration Lamp Readings	0.0022	-0.0294	-23	-33.7%
Post Shock/Vibration to Post Environmental Lamp Readings	0.0074	0.0038	0.2	0.4%

6.5 Phosphor Degradation Analysis

In response to concerns that phosphor lumen output had degraded unacceptably early in life tests conducted by both the Coast Guard and OSI, researchers at OSI conducted an in-depth analysis to identify the potential cause of the unanticipated phenomenon. A report was filed on the study, titled *"Photodegradation of Willemite Phosphors in Hg-Flashlamps"* (reference 11).

Measurements were made on small amounts of green willemite (OSI Type 2285, Mn-activated Zn_2SiO_4) phosphor retrieved from lamps that had been run approximately 18 months on helical-coiled geometry LE/Ar lamps.

The study found that the degradation of the green-emitter phosphor appeared to be photo-induced, and was intrinsically associated with the behaviour of the particular willemite phosphor. The postulated causes appeared to be attributed to a photo-oxidation or photo-ionization of the Mn^{2+} which changes the phosphor constitution to the point that the UV-to-visible light conversion ceased completely.

A conclusion was drawn that oxygen molecules were being stripped from the light-generating MnO_2 compound as a result of a reduction in the oxygen partial pressure in the dry air environment in the glass envelope surrounding the helical-coiled, phosphor-coated mercury lamp. An observation was made during the life test on several lamps that those lamps with less exposed tungsten electrode leads (between expoxy potting and base of lamp) tended to produce the green light much longer than the those lamps with a greater length of exposed tungsten electrode. A theory discussed at the time was that the UV from the mercury emission could be ionizing the surrounding dry air atmosphere of the lamp envelope. The resulting ozone could have expedited the oxidation of the exposed tungsten electrode leads, causing a reduction in the oxygen partial pressure in the envelope. The theorized-result was that oxygen was being pulled out of the green light-producing MnO_2 compound, changing its character to the point that visible light was no longer produced.

The primary recommendation of the study was that the oxidizing character of the atmosphere surronding the phosphor should be carefully controlled, either by a suitable gas mixture, or by "gettering" materials, in order to minimize both the reduction processes occurring when the lamp is operating in nitrogen, and the possible oxidation of Mn when the lamp is operated, as it was at that time, in air. Other recommendations made by the authors of the paper were:

a. Move to a different type of willemite phosphor. It was recommended that willemite types not containing As, or a GS-coated willemite phosphor that exhibits better lumen maintenance properties be investigated.

b. Move to alternate Mn^{2+} - activated phosphors. The study indicated that efficient green-emitting phosphor containing Mn^{2+} and based on sturdy, high-stability host lattices were commercially available. The authors recommended a Towanda phosphor type #219X.

c. Move to green-emitting phosphors not containing Mn . According to the authors, another family of green-emitting phosphors of high stability (Towanda Types #229X) is based on hexa-aluminate lattices and incorporates Ce^{3+} as sensitizer and Tb^{3+} as the emitter. The emission from the latter is predominately in the green, but there are weaker emission lines in the blue and in the red spectral regions.

From the observations made during the life test, a further recommendation is offered herein to explore the elimination of all exposed tungsten in the glass envelope so as to remove the possibility that the oxidation of the metal is cause of an oxygen reduction in the glass envelope. Combining this effort with a nitrogen gas (so as to eliminate photo-induced ionization of the oxygen) environment may eliminate the phosphor problem.

The identification and analysis of the phosphor problem occurred too late in this development effort to attempt to correct the problem. It should be pursued further in the future.

6.6 Field Tests

During the period between 1 February and 1 December 1995, a green LE/Ar prototype lamp system and a red neon lamp system were field tested on operational navigation buoys by the US Coast Guard Cutter RED WOOD, a buoytender servicing the New London, CT area. Each lamp type was installed in a clear 155 mm standard lantern so as to maximize the gain from the direct color-emitting lamp. Both the red and green lamps were set to a FL4(0.4) flash characteristic.

After ten months of field operation, the units experienced no failures. Several comments were reported on the units as follows:

a. The intensity of the green LE/Ar lamp was noted as dimmer than the green tungsten lamp system it replaced. The lamp (installed on Thames River Buoy LB 9) was reported as dim by a Coast Guard small boat crew and the lamp was replaced. The lamp was later determined not to be defective.

b. The lantern of the test lamp installed on the Connecticut River Buoy LB 26 was reported discrepant by a passing mariner, when it was noted that the Fresnel lens was clear rather than the expected red lens. The navigational aid was checked by the USCGC RED WOOD and determined to be operating properly.

c. The USCGC RED WOOD crew found no difficulty in the use of the multi-position flash characteristic switch. The servicing personnel, however, did note difficulty in timing the flash characteristic above decks in bright sunshine as the surface luminance of the phosphor was much less than the tungsten filament.

7. DELIVERED PROTOTYPE LAMP SUMMARY

The following deliverables were made to the U.S. Coast Guard Research Center, Groton, Connecticut:

6 Green + 6 Red Coiled LE/Ar Lamps and 12 Power Supply/Controller Units	16 July 1991
4 Green LE/Ar + 4 Red Neon Coiled Lamps	23 October 1992
4 LE/Ar Green Circular Lamps and 3 Green + 4 White Coiled LE/Ar Lamps	17 December 1992

7.1 Coiled LE/Ar Lamp Photometric Data

The photometric data for delivered prototype lamps are summarized below in Table 7-1.

TABLE 7-1. DELIVERED PROTOTYPE LAMP PHOTOMETRIC DATA

Lamp ID	Color	Intensity (cd)
G003	Green	36.9
G004	"	35.0
G005	"	29.4
G006	"	34.4
G007	"	23.8
G008	"	26.9
R003	Red	11.9
R004	"	12.2
R005	"	11.3
R006	"	10.0
R007	"	8.4
R009	"	10.6

Photometric measurements of lamps delivered later in the development to the Coast Guard are provided in Table 7-2.

TABLE 7-2. PHOTOMETRIC DATA ON SECOND LE/AR LAMP SET

Lamp ID	Type	Color	MHI (cd)
G013	LE/Ar	Green	36
G022	"	"	39
G032	"	"	28
G036	"	"	37
R012	Neon	Red	19
R014	"	"	18
R015	"	"	16
R016	"	"	18

Finally, a third set of lamps including four white and three green LE/Ar lamps were delivered. Their photometry is shown in Table 7-3.

TABLE 7-3. PHOTOMETRIC DATA ON THIRD LE/AR LAMP SET

Lamp ID	Type	Color	MHI (cd)
G014	Coiled LE/Ar	Green	31
G015	"	"	33
G031	"	"	32
W001	"	White	25
W002	"	"	20
W003	"	"	20
W010	"	"	24

7.2 Circular Lamp Photometric Data

Circular lamps of 3.5" diameter also were delivered to the Coast Guard as required by a later Modification to the contract. These lamps were coated with 2285 green phosphor and connected to a mating base similar to the coiled LE/Ar lamps. The circular lamps are compatible with the power supplies and can be connected directly. presents the photometric data.

TABLE 7-4. PHOTOMETRIC DATA ON THE LE/AR CIRCULAR LAMPS

Lamp ID	Type	Color	Lumens
G042	Circular LE/Ar	Green	59
G045	"	"	83
G046	"	"	78
G047	"	"	86
G048	"	"	89

[Page Intentionally Left Blank]

8. CONCLUSIONS

The goal of this project was to develop a direct color emitting lamp technology to replace the incandescent sources currently used by the U.S. Coast Guard in their minor Aids to Navigation systems. To accomplish this, the project was broken into three phases. These were:

- Phase I - Technology Survey
- Phase II - Construction of Prototype Navigation Lights
- Phase III - Final Report with Design Specification and Reprocurement Package

The most promising technology identified during Phase I was a small gas discharge lamp which utilizes a liquid mercury electrode and a rare gas buffer of argon (Ar), referred throughout this report as the LE/Ar lamp. The lamp were coated with various types of phorphor to develop the desired color. Acceptable white and promising green-emitting lamp/phosphor systems were developed; however, no suitable red or yellow phosphors were identified for use with the LE/Ar lamp. Instead, a red lamp was developed using neon fill gas. No lamp capable of producing an acceptable yellow color light was achieved. More work is needed to obtain a longer lumen life from the green phosphor in the LE/Ar lamp system. Refer to Section 6.5, titled Phosphor Degradation Analysis on page 6-19 for further discussion on this topic.

8.1 Prototype Lamp Performance Summary

The three lamp systems developed or investigated during the term of this project were:

- LE/Ar phosphor-coated mercury lamps which emit green, red, and white colors.
- Neon discharge lamps which emit in red.
- A 3.5 inch diameter, circular LE/Ar green lamp as a prototype for a new optical system under development separately by the Coast Guard.

With the exception of the circular lamp, all prototype lamp systems were constructed in a helical coiled-shape so as to minimize the vertical height of the lamp and maximize the optical coupling of the lamp to existing Fresnel drum lens in use by the Coast Guard. The

pertinent physical data on the lamps is summarized in are summarized in Tables 8-1, while Table 8-2 details the measured intensity, and power values for the green LE/Ar, red neon, and standard 155mm marine lantern with 0.55 amp tungsten filament lamps and colored lens. The green LE/Ar had a mean horizontal intensity (MHI) similar to that of the green tungsten filament lamp, but with an increased MHI-to-power ratio (7.3 compared to 4.7 for the tungsten filament lamp coupled with a green lens). The red neon lamp had MHI, and MHI-to-power ratio values that were approximately one quarter that of the tungsten lamp with red lens.

Measurements showed that the vertical beam spread of the LE/Ar lamps were much greater than for tungsten lamps. Both the green and red LE/Ar lamps showsed full beam spread of greater than 15°, compared to only 3° for the tungsten filament lamp.

The developed LE/Ar power system design successfully integrated a full set of programmable flash patterns into the beacon. This selection included an experimental "ultra-quick" cycle that was not possible with tungsten lamps due to incandescence and nigrescence times of the lamp filament.

The final lamp and power supply assembly are shown in Figure 8-1. A complete package of fabrication drawings and process specification to reproduce the final prototype system are included as Appendices B and C to this report. The final design is public domain with the exception of several patents obtained by GTE Sylvania and OSI during the execution of the project. Prior to fabricating this system, the U.S. Patent Office and OSRAM Sylvania should be contacted to determine patent right information.

TABLE 8-1. PHYSICAL PARAMETERS OF COILED AND CIRCULAR LAMPS

Coiled Lamp:	Height of Emitting Area:	0.75"
	Width of Emitting Area:	0.75"
	Arc Length:	9.50"
Circular Lamp:	Height of Emitting Area:	0.16"
	Width of Emitting Area:	3.50"
	Arc Length:	11.00"

TABLE 8-2. OUTPUT CHARACTERISTICS OF SELECTED LAMPS

Color	Lamp	Lamp Power(W)	MHI in 155mm Beacon(cd)	MHI/Power cd/W
Green	Coiled LE/Ar (Green Phos.)	4.2	30.9	7.4
	Tungsten (Green Filter)	7.0	33.2	4.7
Red	Neon	6.2	10.8	1.7
	Tungsten (Red Filter)	7.0	39.5	5.6

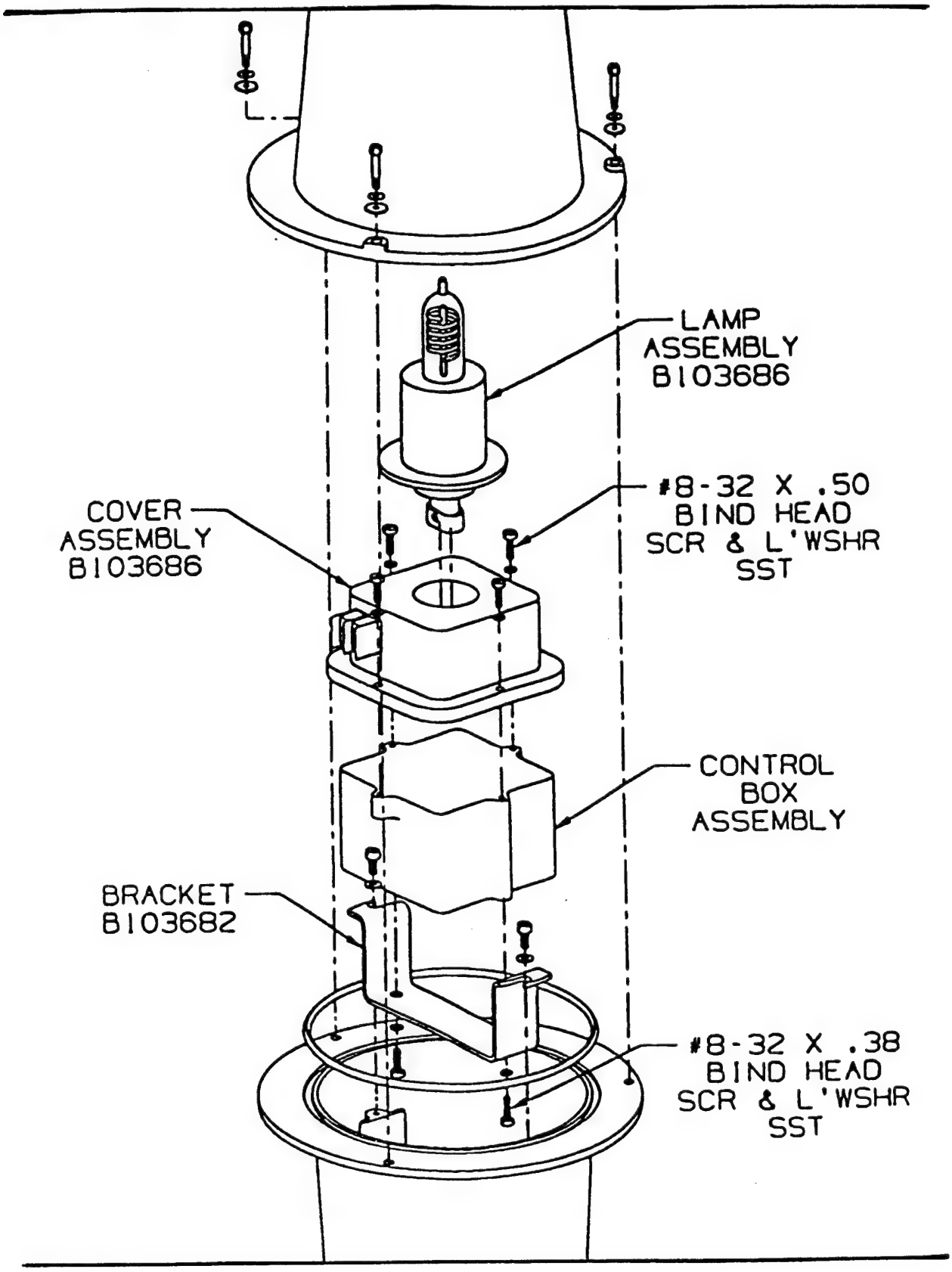

Figure 8-1. Exploded View of LE/Ar Lamp and Power Supply Assembly

REFERENCES

1. *Recommendations for the Colors of Light Signals on Aids to Navigation.* IALA Bulletin 1977-4 No. 72. December, 1977.

2. *CIE Proceedings 8th Session, Cambridge, England 1931; pages 19 to 29, (recommendations 1 to 5).* Commission Internationale de l'Eclairage (International Commission on Illumination).

3. *IES Practical Guide to Colorimetry of Light Sources.* IES Testing Procedures Committee, Journal of the Illuminating Engineering Society, Summer, 1989.

4. *Specification of Small Chromaticity Differences.* D.L. MacAdam, J. Opt. Soc. Am., Vol 33, p 18-25 (1943).

5. *Inorganic Phosphors and Related Chemicals.* A complete list of available phosphors from the OSI Chemical and Metallurgical Division, Towanda, PA.

6. *Wavelengths and Transition Probabilities for Atoms and Atomic Ions, NSRDS-NBS 68.* U.S. National Bureau of Standards, 1980, Washington, DC.

7. *Purchase Description for 12-Volt Solid State, Flasher for Maritime Aids to Navigation.* P.D. No. 181B, U.S. Coast Guard Ocean Engineering Division, Washington, DC, November, 1975.

8. *Photometric Tests on Coast Guard Standard Lamps and Optics.* LT Daniel M. Brown, U.S. Coast Guard Research and Development Center, June, 1986.

9. *Colors of Light Signals, Publication CIE No. 2.2 (TC-1.6).* Commission Internationale de l'Eclairage, 1975.

10. *Colored Sources for Marine Signal Lighting -- Phase I, Task 2 Final Report.* Michael C. Bleiweiss, Harold L. Rothwell, George J. English, Contract DTGC23-87-C-20026. GTE Products Corporation, December, 1988.

11. *Photo-Degradation of Willemite Phosphors in Hg-Flashlamps.* OSI Report TR93PTL002, R.G. Pappalardo, B. DeBoer, and M. Bleiweiss, Osram Sylvania, April 26, 1993.

APPENDIX A

The *Phase I Final Report* is included as *Appendix A* to this *Report*. As noted earlier, work performed previous to January 29, 1993 was conducted under the Electrical Products Group of GTE Products Corporation, predecessor organization to OSRAM SYLVANIA Inc.

[BLANK]

PHASE I TASK 2 FINAL REPORT

GTE LIGHTING PRODUCTS

FINAL REPORT

COLORED ARC SOURCES FOR MARINE SIGNAL LIGHTING

CONTRACT #DTCG23-87-20026

Michael C. Bleiweiss
Harold L. Rothwell
and
George J. English

December 1988

Abstract

This report fulfills the requirements of Task 2 of Phase 1 of Contract #DTCG23-87-20026.

Our investigation probed the area of pulsed discharge sources for the production of color banded light. Seven distinct approaches were considered and hundreds of sample lamps were fabricated for evaluation and tests. Test results show that the Liquid Electrode light source is the only one that meets the objectives set forth in the contract. This source has the potential for extremely long operational life, immunity to shock and vibration conditions, and efficiencies significantly better than the present lower wattage tungsten package.

The Liquid Electrode lamp can be operated at any cycle period including continuous operation.

FINAL REPORT FOR COLORED ARC SOURCE DEVELOPMENT
TABLE OF CONTENTS

1. INTRODUCTION
1.1 Concept Discussion

2. LABORATORY TEST SET-UPS AND PROCEDURES
2.1 Laboratory Test Set-Up for Intensity Measurements

3. TEST PROCEDURES FOR SPECIFIC REQUIREMENTS
3.1 Color and Efficiency
3.2 Flash Capability
3.3 Fixed Characteristic
3.4 Lumen Output
3.5 Life Test
3.6 Beacon Tests
3.7 Environmental Conditions

4. RESULTS
4.1 Liquid Electrode Lamp
4.1.1 Pulsed Operation in the Test Box
4.1.2 Ultraviolet Versus Visible Measurements
4.1.3 Phosphor Evaluation
4.1.4 Beacon Optical Evaluation
4.1.5 Life Test
4.2 Two Pool and Capillary Pool Lamps
4.2.1 Two Pool Lamp
4.2.2 Capillary Pool Lamp
4.3 Gas Lamp
4.3.1 Liquid Electrode Lamp with Neon Fill Gas
4.4 Liquid Electrode Lamp Under Continuous Operation

5. SUMMARY

6. REFERENCES

Appendix A LITERATURE SEARCH

Appendix B EXPERIMENTAL TEST SET-UPS

B.3 Metal Vapor Lamps
B.3.1 Equipment
B.3.2 System Calibration
B.3.3 Experimental Procedure
B.3.4 Experimental Results
B.4 Cold Salts Lamp
B.5 Heated Salts Lamp
B.6 Amalgam Lamp
B.7 Experimental Procedure for Evaluating the Liquid Electrode Lamps
B.7.1 Pulsed Operation in the Test Box
B.7.2 Test Procedure for Evaluating Phosphors
B.8 Continuous Operation Lamps
B.8.1 Metal Halide Lamp

Appendix C HID LIGHT SOURCES IN NAVIGATIONAL AID APPLICATIONS
(Reprinted from Journal of the Illuminating Engineering Society).

List of Figures

1) Transmission Spectra of USCG Colored Beacon Filters.
2) Data Sheet for Evaluation of the Prototype Light Source.
3) Power Distribution of a Fluorescent Lamp.
4) Liquid Electrode Lamp in a Phosphor Coated Jacket.
5) Line-of-Sight Emission Versus Input Power for the Liquid Electrode Lamp in a Phosphor Coated Jacket.
6) (Output Intensity)/(Input Power) Versus Input Power for the Liquid Electrode Lamp in a Phosphor Coated Jacket.
7) UV Emission Versus Pulse Width for the Liquid Electrode Lamp.
8) Time Development of the Liquid Electrode Lamp Spectrum.
9) Time Development of Ratio of Mercury Lines.
10) Spectrum of the Liquid Electrode Lamp Running in Continuous Mode.
11) Intensity versus Input Power of the 254 nm, 436 nm and 546 nm lines in the Liquid Electrode Lamp.
12) Ratio of the 254 nm UV Line to the 436 nm and 546 nm Visible Lines in the Liquid Electrode Lamp.
13) Test Set-Up for Evaluating Lamps in the Beacon.
14) Two Pool Lamp.
15) Spectrum of the Mercury Neon Lamp.
16) Schematic of the Pulse Modulation Circuit.
17) Output Signal of the Pulse Modulation Circuit.
18) LE/Ne Pulsed Source Light Output.
B-1) Performance of the 0.25A, 3W USCG Incandescent Lamp
B-2) Performance of the 3.05A, 37W USCG Incandescent Lamp.
B-3) Average Intensity Versus Pulse Width for the 0.25A, 3W USCG Incandescent Lamp.
B-4) (Average Intensity)/(Average Input Power) for the 0.25A, 3W USCG Incandescent Lamp.
B-5) Metal Vapor Lamp.
B-6) Schematic of the Test Set-Up for the Metal Vapor Lamps.
B-7) Spectrum of the TII Metal Vapor Lamps.
B-8) Typical Voltage, Current and Emission Waveforms for the TII Metal Vapor Lamp.
B-9) Radiated Power Versus Pulse Width for the TII Metal Vapor Lamp.
B-10) Spectrum of the LII Metal Vapor Lamp.
B-11) Cold Salts Lamp.
B-12) Time Development of a Cold Salts Lamp Discharge.
B-13) Light Output Versus Time of a Cold Salts Lamp.

B-14) Repeatability of Light Output of the Nal Cold Salts Lamp.
B-15) Heated Salts Lamp.
B-16) Schematic of Test Set-Up for the Liquid Electrode Lamp.
B-17) Test Set-Up for Evaluating the Phosphor Slides.
B-18) Spectrum of a 45 Watt Metal Halide Lamp.
B-19) Spectrum of a 45 Watt Metal Halide Lamp through the Green Beacon Filter.
B-20) Spectrum of a 45 Watt Metal halide Lamp through the Yellow Beacon Filter.
B-21) Spectrum of a 45 Watt Metal Halide Lamp through the Red Beacon Filter.

List of Tables

1 Luminance Measurements
2 Efficiencies in Colored Bands
3 Summary of Sources.
B1 Phosphor data
B2 Phosphor Slide Data
B3 Phosphor Emission Data
B4 Performance of a 45 Watt Metal Halide Lamp through the Colored Beacon Filters.

1 INTRODUCTION

1.0 Overview

The purpose of our research for the Coast Guard is to develop a discharge source that will produce the required colors and be operated either as a constant or pulsed source. The first phase of this work is to find and develop a suitable source. Several potential technologies were identified and investigated.

The following describes the program followed in developing and testing a spectrally selective discharge lamp for use as an aid to navigation under Coast Guard contract DTCG23-87-C-20026. It includes a complete description of the equipment and procedures used in testing the various sources.

This report fulfills the requirement for a final report on Task 1 of the project as described in Sections 1.4.1, 3.2 and F-2 (f) of the contract and comprises Task 2 of the project.

1.1 Description of Program

For the first part of this project a computerized literature search was performed to find any information or descriptions of previous work in pulsed arc sources. No research relevant to this project was found. See Appendix A.

Part 2 was comprised of the investigation of various arc lamp systems. As a result of the investigation it was determined that the lamp most suitable for use in signal beacons is the Liquid Electrode lamp. Our experimental results for this lamp are given in Section 4. Experimental procedures, test set-ups and test results are described in Appendix B.

The final section of this report contains a summary and recommendation for a color source lamp.

Over the course of this project engineering assistance from GTE's Associates program was utilized at no cost to the US Coast Guard. It is the consensus at GTE that this program is of mutual benefit.

1.2 Concept Discussion

The human eye responds to light in the spectral region from approximately 380nm to 780nm. Over this range the typical human eye response is characterized by a nearly gaussian function with the peak occurring at 555 nm. This is referred to as the photopic

response. Tungsten, the most familiar light source, produces electromagnetic radiation over a broad range described by the Blackbody Function. Unfortunately, most of the emission of a tungsten lamp is beyond the visible in the infrared (i.e.; heat).

A measurement of the efficiency of a source to produce visible radiation, namely efficacy, is defined as the ratio of total luminous flux emitted by the lamp to the total lamp power input. The units are lumens per watt (LPW). (The lumen is defined as the product of the photopic eye response and the radiated power over the visible spectrum.)[1]

Tungsten lamps typically have efficacies that range from approximately 5 lpw for a low wattage lamp to 10 lpw for a commercial light bulb to 20 lpw for high performance special application light bulbs. However, the overall efficiency for power conversion into visible radiation is only a few percent. The balance of the energy is converted into heat.

Significant increases in efficiency have been achieved with the introduction of gaseous discharge light sources. The most common commercial products include the mercury based high intensity discharge (HID) and high pressure sodium (HPS) lamps. These sources can produce as much as 100 lpw with efficiencies as high as 20 percent for some spectral regions of the visible spectrum. Unlike tungsten, these sources produce discrete emission bands, making the use of additives (usually a metal species) necessary to produce a "white" light. Such a lamp is referred to as a metal halide discharge lamp, the name reflecting the use of a metal salt additive.

The increased efficiency of the discharge lamps mentioned above does not come without a cost, however. The discharge is inherently unstable, requiring the use of an auxiliary regulating circuit to maintain the arc. In order to limit the current through the discharge, these circuits may only consist of simple discrete elements or as is often the case, an electronic switching network.

The use of discharge sources with selective color emission finds a particularly specialized application as navigational aids for seagoing vessels (buoys, channel markers, etc.). The most common colors required for this application are in specific areas of the red and green regions of the visible spectrum, with limited needs for sources which emit in the yellow and blue as well.

Existing beacons achieve these different colors by filtering tungsten incandescent light with acrylic lenses. This lighting scheme has several drawbacks, the first and most important of which is efficiency. Tungsten is not well suited to radiate in narrow color bands, and as a result is very inefficient. Additionally, the acrylic lenses in use today are not sufficiently selective, and consequently pass limited amounts of unwanted colors. The transmission

spectra of the filters used in the signal beacons are shown in Figure 1.Under certain conditions, different colored beacons become indistinguishable. A third important problem with the existing system is that tungsten coils are somewhat fragile in the environment of the ocean and operational life can be fairly short. In most beacon and signal fixtures several light sources are mounted on a changer which can be positioned into place when a lamp fails due to the breakage of the tungsten filament.

Conventional discharge sources require a "warmup" period before substantial light output can be achieved. This time period, ranging from 10-30 seconds, prevents this type of source from being used for pulsing applications where the on time may be as short as a tenth of a second. For pulse operation a different type of source is needed. An auxilliary heater for example can be used to maintain the gas in the proper condition, or some other mechanism of generating the light can be used.

Rare gas discharge lamps can generate light without warmup, but color selection is fairly limited. For example, neon can generate a reddish color, but still not sufficient to meet the USCG color requirements.

Our approach consisted of designing a low pressure rare gas/metal additive discharge that produces spectrally selective visible light in combination with ultraviolet (UV). The UV can be used to stimulate the phosphors to blend with the visible emission of the rare gas, producing the proper color.

All of the source designs produced color and could be made to meet the USCG pulse conditions. However, most of the designs did not appear to have long enough operational lives to be useful. The one exception involves the source designed with an active liquid electrode (LE). The prototype LE source described in this report uses mercury as one electrode and tungsten as the other.

Visible emission is then produced by addition of a rare gas mix, usually neon and argon in combination with a phosphor that is stimulated by the UV emission from the mercury. When the liquid electrode serves as the cathode the source has extremely long life. We have developed specific pulse power circuitry which enables the LE discharge to be operated in an efficient manner over all the required USCG flashing cycles including continuous operation.

2 TEST SET-UP AND PROCEDURES

Appendix B.1 describes the test set-up and procedures for measuring the intensities of the sample lamps. The modifications of these procedures for evaluating the liquid electrode lamps are described in Appendix B.7.

2.1 Ultraviolet Measurements

In the liquid electrode lamp the mercury is stimulated to emit in the ultraviolet (uv). The uv light in turn stimulates a phosphor to emit at the desired color. In order to determine the optimum thickness of the phosphor coat, it is necessary to determine the conversion efficiency of the uv to visible light. To do this, the uv output of the lamp is determined using a Photomultiplier Tube (PMT) with enhanced sensitivity in the uv. The output of the lamp with various phosphor thicknesses is then measured. The conversion efficiency is the uv emission divided by the emission in the band of interest. Because tungsten lamps have virtually no emission in the uv, they cannot be used to calibrate the PMT. Instead, a hollow cathode deuterium lamp, which emits primarily in the uv, is used as an intensity standard with a uv passing/visible blocking filter; following the same procedure as described above for visible light.

3 TEST PROCEDURES FOR SPECIFIC REQUIREMENTS

Once a suitable light source is found, it will be tested to ensure that it meets the requirements of the contract under Sections 3.1.2 and 3.3.2.1. These tests are performed according to the procedures described below. To facilitate the evaluation of the lamp, the data sheet, shown in Figure 2, will be used to list all of the test conditions and results.

3.1 Color and Efficiency

The emission spectra of the sources are taken using an optical multichannel analyzer (OMA). The spectrum will then be run through the colorimetry programs (which are the same as the ones used by GTE's Tests and Measurements Department) to determine if its chromaticity coordinates meet the requirements of IALA Bulletin #72-1977-4, Recommendations for the Colors of Light Signals on Aids to Navigation. The colorimetry programs also calculate the power output of the lamp (lumens) from the spectrum, allowing the determination of its efficacy. Lamps that produce red, yellow, green and white light will be tested.

3.2 Flash Capability

The source will be flashed in each of the 11 patterns shown in COMDTINST M16500.3, page 6-52 using a custom-designed 12 volt DC power supply. The period duty cycle, flash and eclipse lengths will be within 6% of the specified values.

3.3 Fixed Characteristic

Lamps will be designed to operate in a rapid pulse mode such that their operation appears to be continuous.

3.4 Lumen Output

The prototype source will be operated in an integrating sphere to determine its efficacy (lumens per watt output).

3.5 Life Test

A number of prototype lamps will be life tested on a rack using the same pulsing circuit that is intended for use in the beacon. This circuit will pulse the lamps under the conditions that are determined to give the best results.

Rev. D
03/14/88

COLORED ARC SOURCE DATA SHEET

Date: Time: Operator:

Location: 60 Boston Street
Salem, MA 01970

Lamp Type: Lamp ID:

Fill: Electrode Material: Arc Gap (mm)

Coatings: Capsule Volume (mm^3):

Heater Current (amps): Cell Temperature (^oC):

Vapor Pressure (torr):

Pulse Width (msec): Pulses/Second:

Amplifier Gain Settings - Lamp Voltage Amplifier:

Lamp Current Amplifier:

PMT Voltage: PMT Preamplifier:

Voltage: Current:

Energy Input/Pulse (Watt-Seconds): Average Watts in Pulse:

Filter Used: SPD File Name:

Radiated Energy/Pulse: Integrated Energy/Pulse:
(Line of Sight)

Average Radiated Microwatts: Average Lumens:

Efficiency $\left(\frac{\text{electrical energy in}}{\text{radiated energy out}}\right)$ Target Efficiency:

Notes:

Signature:

Figure 2

3.6 Beacon Tests

To determine how well the lamps couple to the beacons' optical system, the sources will be mounted in the 155 mm, 250mm and 300mm beacons supplied by the Coast Guard. In these tests, the intensity of the lamp in the beacon will be measured from 80 feet away using an EG&G model 550 photometer with a photopic head and a model 550-3 pulse integrator. With the lamp operating either in a continuous mode or pulsed such that its operation appears continuous (depending on the nature of the source developed), its intensity will be measured with the beacon rotated in 2 degree increments to determine that the intensity does not drop below 50% of the required minimum values due to the tip-off or mounting parts. The intensity of the lamp will be controlled by adjusting the input power to give values of 500, 270, 150, and 75 candela.

If the lamp is run in a rapid pulsed mode the intensity is given by:

$$\frac{\text{The total integrated energy in the sequence of pulses}}{\text{The total duration of the pulses.}}$$

The vertical divergence of the beam will be measured by projecting the beam onto a wall 80 feet away from the beacon and measuring its intensity with the integrating photometer at various heights above and below the plane of the beacon. The length of the arc will be chosen so as to give the required vertical divergances as specified in COMDTINST M165000.3, pages 6-57 to 6-64.

3.7 Environmental Conditions

A number of prototype Liquid Electrode lamps are currently undergoing the following environmental tests:

1. Temperature from -40 degrees C to +60 degrees C.
   Method 501.1 and 502.1

2. Shock
   Method 516.2, Procedure V

3. Vibration
   Method 514.2 Procedure X, Curve AX 2.5g

4. Salt Fog
   Method 509.1

5. Humidity (0% to 100%)
   Method 507.1, Procedure V

6. Fungus Growth
   Method 508.1

7. Solar Radiation
   Method 505.1, Procedure II

All of the above methods are according to MIL-STD-810C.

4 RESULTS

In order to identify the best type of light source for use in the beacon, a number of different discharge technologies were evaluated. These were:

1. Metal vapor
2. Cold salts
3. Liquid Electrode lamps
4. Liquid Electrode/rare gas
5. Heated Salt
6. Double Liquid Electrode
7. Capillary Pool

Detailed descriptions and experimental results of these lamps are given in Appendix B.

Operating parameters for all of the above lamps, were varied over a wide range, to determine the set of conditions that give the highest efficiency for each lamp:

Current	- 0.1 to 2.0 amps
Pulse Width	- 10 microseconds to 600 millisecond
Pulses/Second	- single pulse to 100 Hz
Vapor Pressure (metal vapor lamps)	- 0.05 to 1.5 torr

4.1 Liquid Electrode Lamps

The lamp exhibiting the best characteristics for signal aids to navigation and subsequently receiving the most extensive testing was the Liquid Electrode lamp. This lamp consists of a pool of mercury sitting at the bottom of the capsule which acts as the cathode. Its principal of operation is that the electric discharge sputters some of the mercury in the pool into the vapor phase; where it then ionizes and forms the radiating plasma. The electrons flow through the liquid electrode, into the plasma to the anode. At the end of the pulse, the mercury recondenses and drops back into the pool. The liquid electrode is never depleted (i.e.; the electrode can never wear out). Because of this, the lamp has the potential of near infinite life (see life test results below).

The emitted spectrum from mercury is almost entirely in the ultraviolet at 254nm. This is shown in Figure 3 which shows the power distribution for a fluorescent lamp. A phosphor is used to convert the 254nm ultraviolet emission into visible light. Phosphors are chosen that give the desired colors. Therefore, one lamp can be used with the color being selected merely by changing an outer jacket that is coated with the phosphor.

Power Distribution of a Fluorescent Lamp

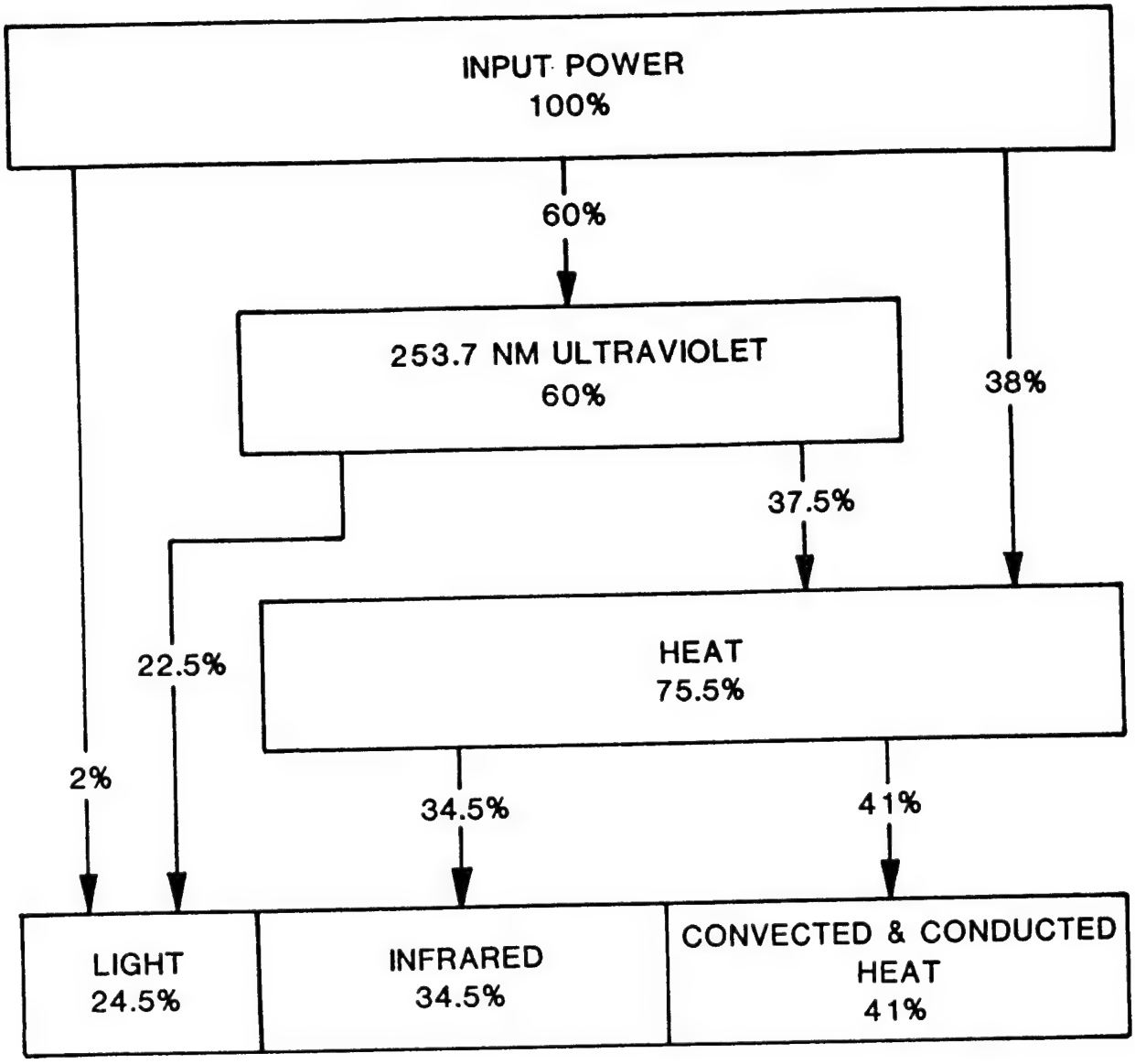

Figure 3

Phosphors that radiate at the preferred colors were chosen with the assistance of GTE's (Sylvania's) fluorescent lamp group. The addition of low pressures of rare gas can also contribute to the emission spectrum of the source. For example neon produces a redish spectrum.

Figure 4 shows a drawing of a liquid electrode lamp with a phosphor-coated jacket. Appendix B.7 gives a detailed description of the apparatus and procedures used in evaluating the liquid electrode lamp.

4.1.1 Pulsed Operation in the Test Box

At a meeting with the Coast Guard on March 21, 1988 it was stated that the output of the liquid electrode lamps appeared to be independent of the input power. It was subsequently discovered that we had been saturating the PMT in the test box. In reality, the emitted power of the lamp does depend on the input power, but the emission decreases more slowly than the power so that the efficiency still increases with decreasing operating power down to a few tenths of a watt. The line-of-sight emission and the line-of-sight output/input power for a liquid electrode lamp in a phosphor-coated jacket are plotted in Figures 5 and 6.

A study was performed to determine the time development of the spectrum of the liquid electrode lamp during a pulse. The spectra of the lamp were recorded using the Optical Multichannel Analyzer (OMA) with the Silicon Intensifier Tube (SIT) tube. A 100 microsecond window was examined at 1 millisecond intervals during the pulse. It was noted that the 254nm line shows immediately at the beginning of the pulse. As the pulse progresses, the upper excitation levels begin to be populated through electron collisions driven by the sustained electrical field from the power source. This causes the emission in the visible lines to increase. The uv emission level remains constant as the visible emission increases, meaning that the efficiency of the lamp for uv emission is greatest the very beginning of the pulse. This is also validated by the fact that the efficiency for uv production increases with decreasing pulse width (see Figure 7). The development of the spectrum over time is shown in Figure 8. In Figure 9, the data is reduced to a ratio between the different mercury lines. After the pulse the discharge cools by recombining the ions and electrons that were conducting the current. This recombination process tends to reverse the early part of the pulse (i.e.; the 254nm uv line persists longer than the upper levels which are predominately in the visible). These results are borne-out by the UV versus visible measurements described in Section 4.1.2, below.

From these curves we have established that operating the liquid electrode lamp in a pulse modulation scheme will optimize the uv production. For the configuration that we have been examining, the peak performance occurs using 0.1 millisecond pulses at 10 watts with a 10%

LIQUID ELECTRODE LAMP
IN A PHOSPHOR COATED JACKET

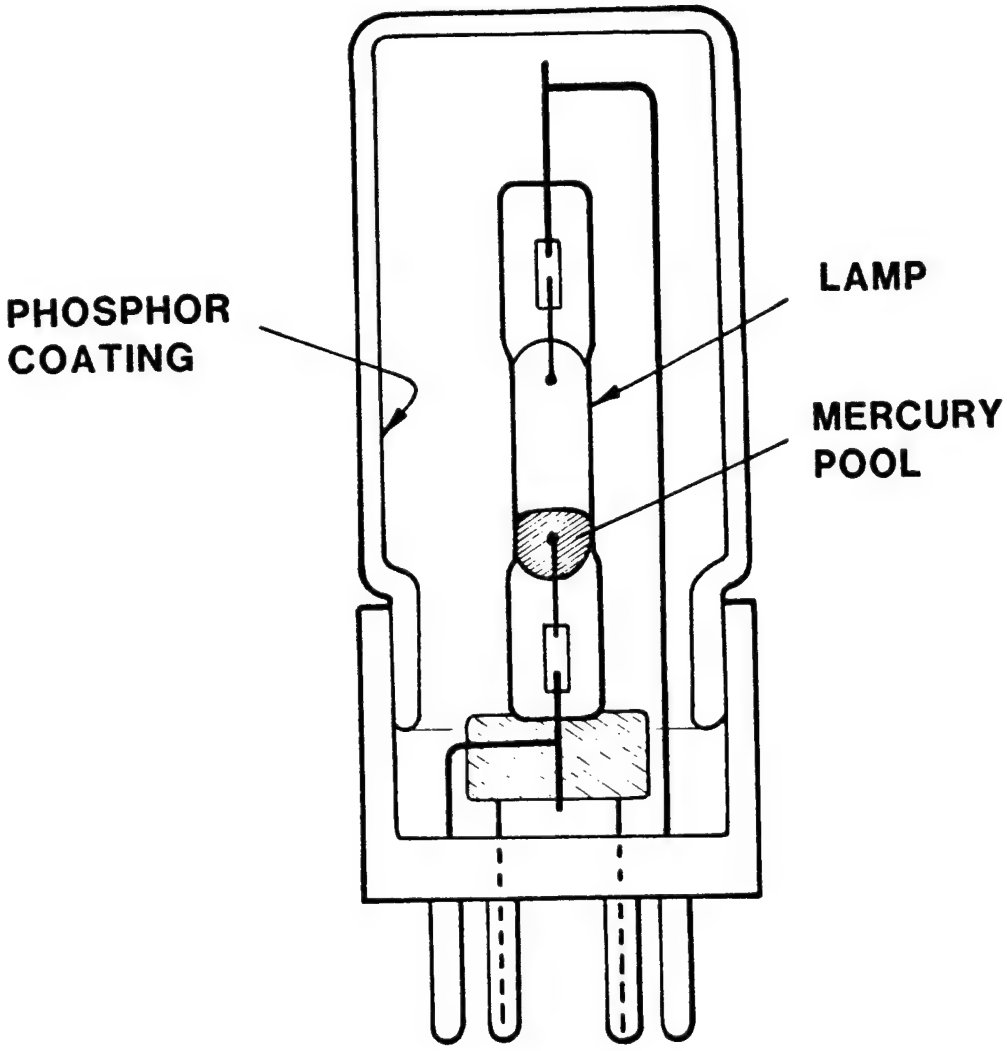

Figure 4

Line-of-Sight Emission Versus Input Power for the Liquid Electrode Lamp in a Phosphor Coated Jacket

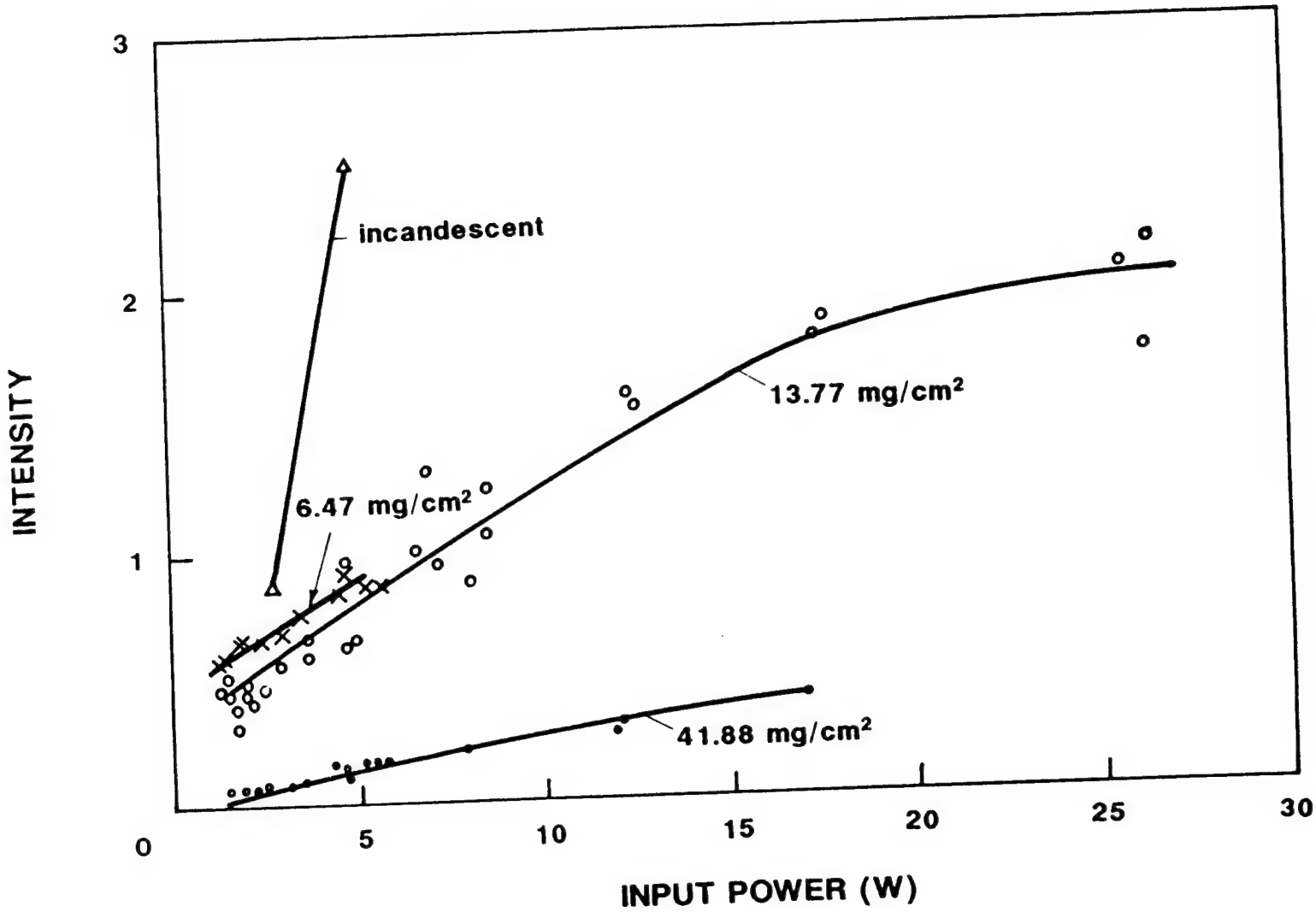

Figure 5

(Output Intensity)/(Input Power) Versus Input Power for the Liquid Electrode Lamp in a Phosphor Coated Jacket

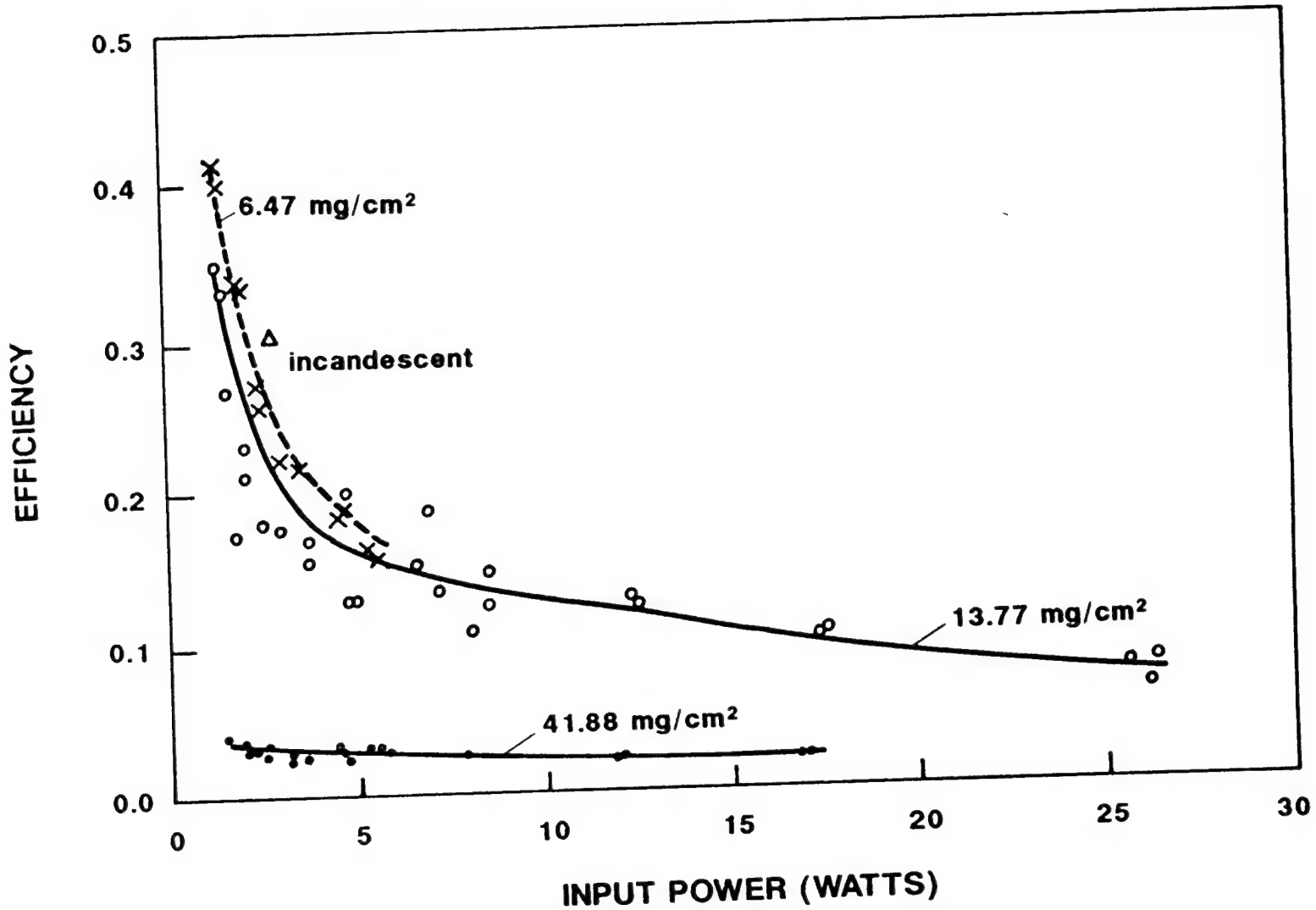

Figure 6

UV Emission Versus Pulse Width for the Liquid Electrode Lamp

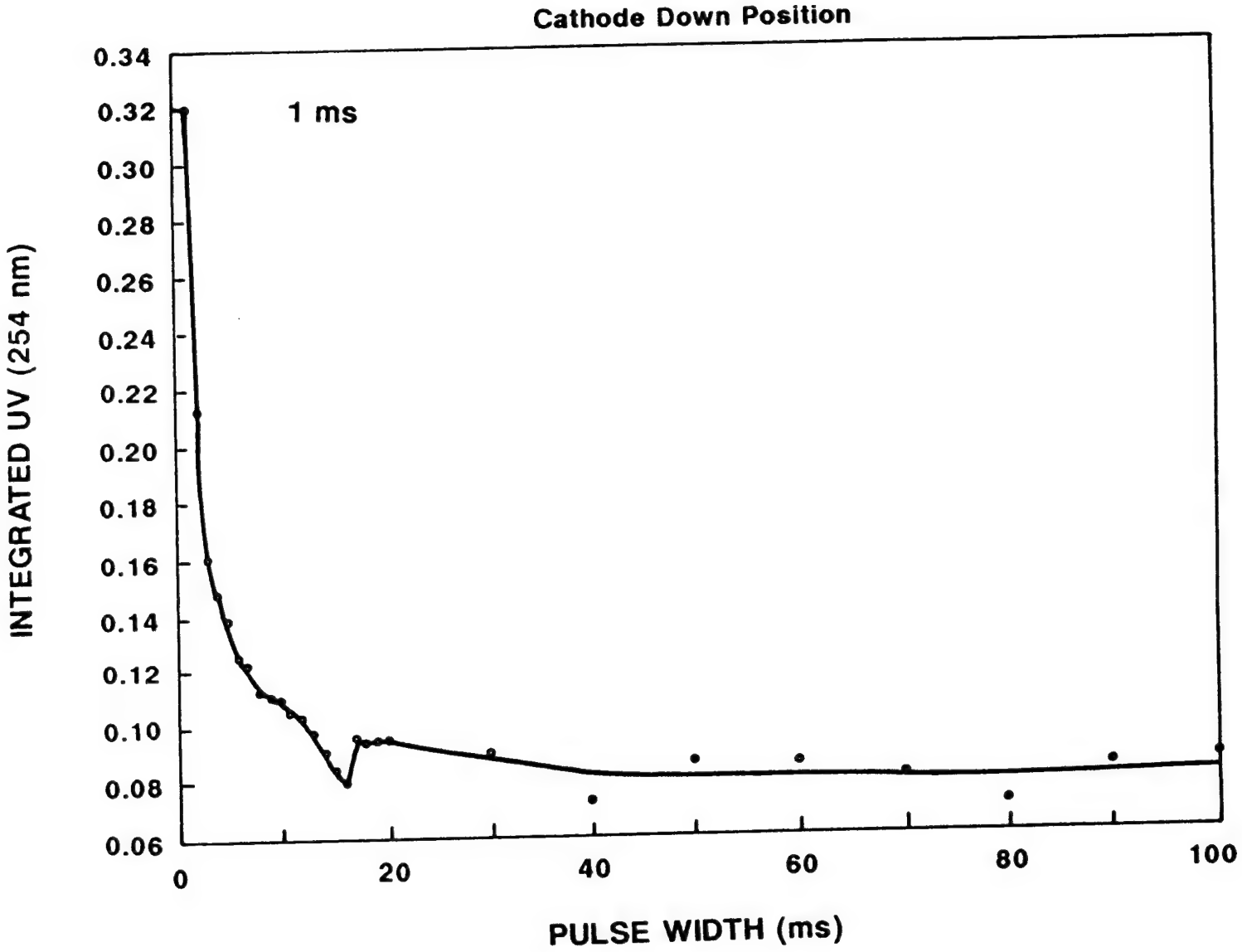

Figure 7

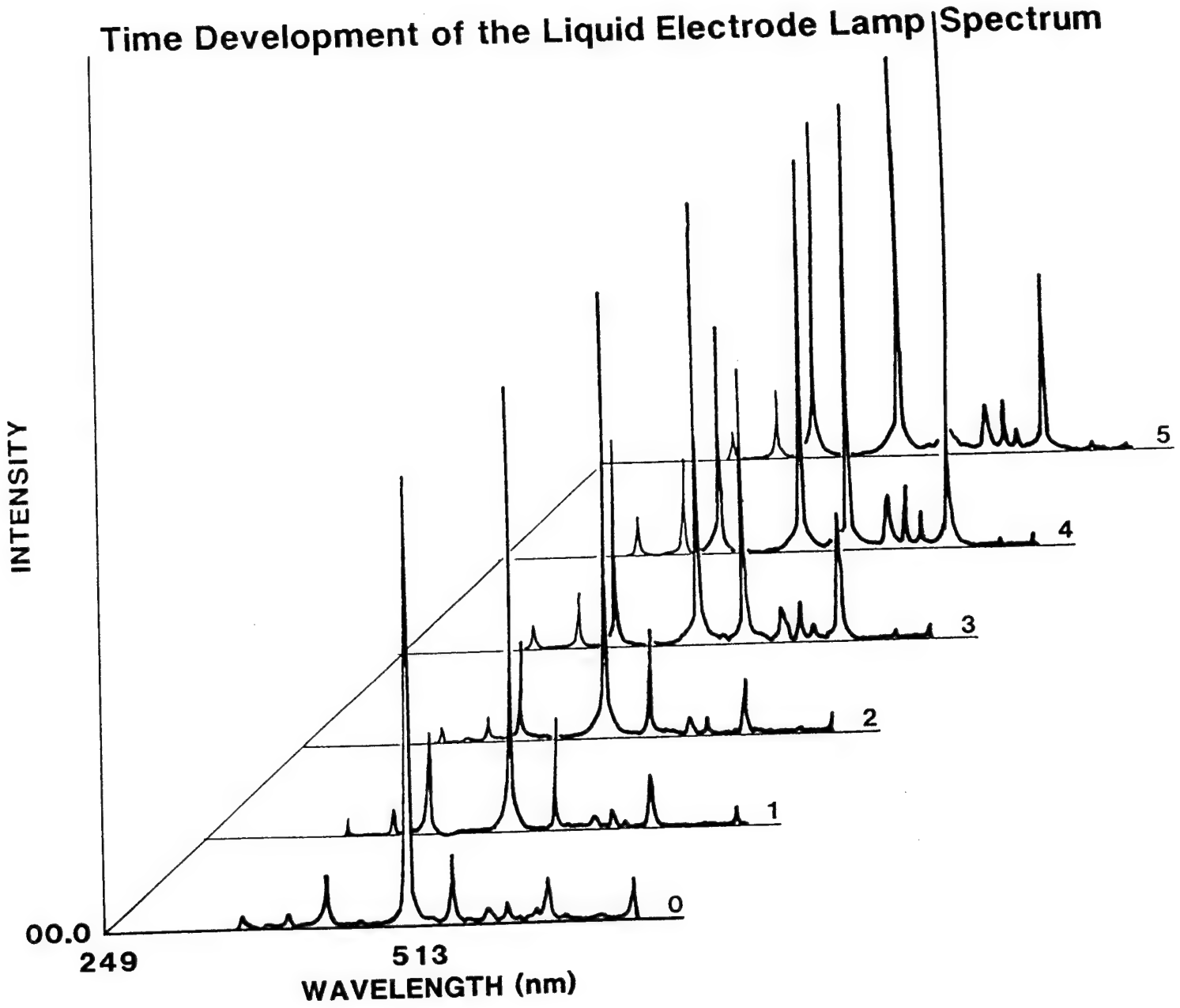
Time Development of the Liquid Electrode Lamp Spectrum
INTENSITY
00.0
249
513
WAVELENGTH (nm)
0
1
2
3
4
5

Figure 8

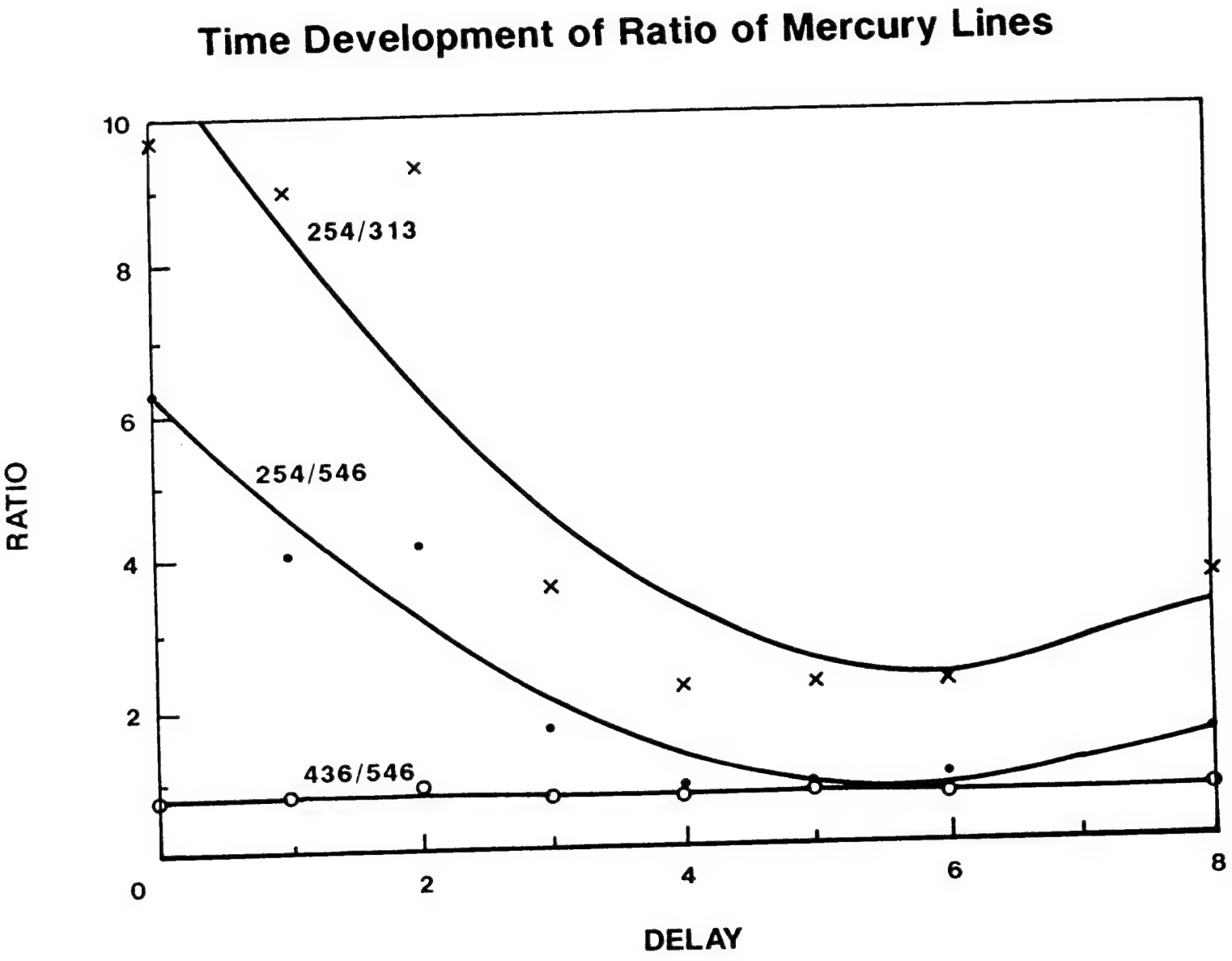
Time Development of Ratio of Mercury Lines
RATIO
DELAY
254/313
254/546
436/546
10
8
6
4
2
0
2
4
6
8

Figure 9

duty cycle (i.e.; 0.1msec on and 0.9msec off). This yields an average power of 1 watt. At this power level, the lamp will out-perform the present 3 watt tungsten source.

4.1.2 Ultraviolet Versus Visible Measurements

To determine the uv efficiencies of the liquid electrode lamp when used with the various phosphors, measurements were made of the 254nm uv and the 436nm and 546 nm visible lines in the liquid electrode lamp and a standard mercury penlight from Oriel Corporation.

First, the mercury penlight was mounted in front of a Jerrell-Ash Monospec 27 monochromator and a spectral power distribution (SPD) was taken. The 254 nm resonance line emits 40 times as much energy as in the 436nm line and 51 times as much as in the 546nm line. Overall, 89% of the total emission is in the main uv line. Next, an SPD was taken of a liquid electrode lamp running in continuous mode. Figure 10 shows the spectrum for lamp operation at 1.5mA. At 1.5mA, the uv line is 15 times as strong as the 436nm line and 21 times as the 546nm line. 80% of the emission is in the 254nm line. At 3ma, the uv line is 30 times as strong as the 436nm line and 39 times as the 546nm line. 86% of the emission is in the 254nm line.

The above ratios are similar to those for a fluorescent lamp; which has about 90% of its total emission in the 254nm uv line. This indicates that both the penlight and the liquid electrode lamp are operating at low enough pressures that the radiation is not being shifted into the visible.

Next, a liquid electrode lamp was pulsed inside the test box. Narrow band pass filters were used to isolate the 254nm, 436nm and 546 nm lines. The output of the lamp was measured over a range of input powers for 10msec, 100ms and 500ms pulses. The intensity versus input power of the lamp for each wavelength is plotted in Figure 11. The emission in the uv is almost independent of the input power. In contrast, the two visible lines have a definite dependence on the input power. Since the internal pressure of the lamp can be expected to increase with increasing input power, this indicates that the uv emission is not affected by the pressure, but that increasing pressure increases the amount of visible radiation. This, in turn, indicates that the fraction of the emission in the visible lines increases with increasing pressure, as expected. This is illustrated in Figure 12 which show the ratio of the uv line to each of the visible lines. The figures also show that the output of the lamp is only very weakly dependent on the pulse width.

In order to determine if the air was blocking the short wavelength ultraviolet radiation from the liquid electrode lamps that could be providing additional stimulation to the phosphors, capsules were mounted inside phosphor coated jackets that were then evacuated. Line-of-sight spectral power distributions were then taken using the Jerrell-Ash Monospec 27 0.3m monochromator. Then the vacuum inside the jacket was broken and the spd's repeated. The emission was higher when there was air inside. The air inside the jacket would tend to increase conductive and

Spectrum of the Liquid Electrode Lamp Running in Continuous Mode

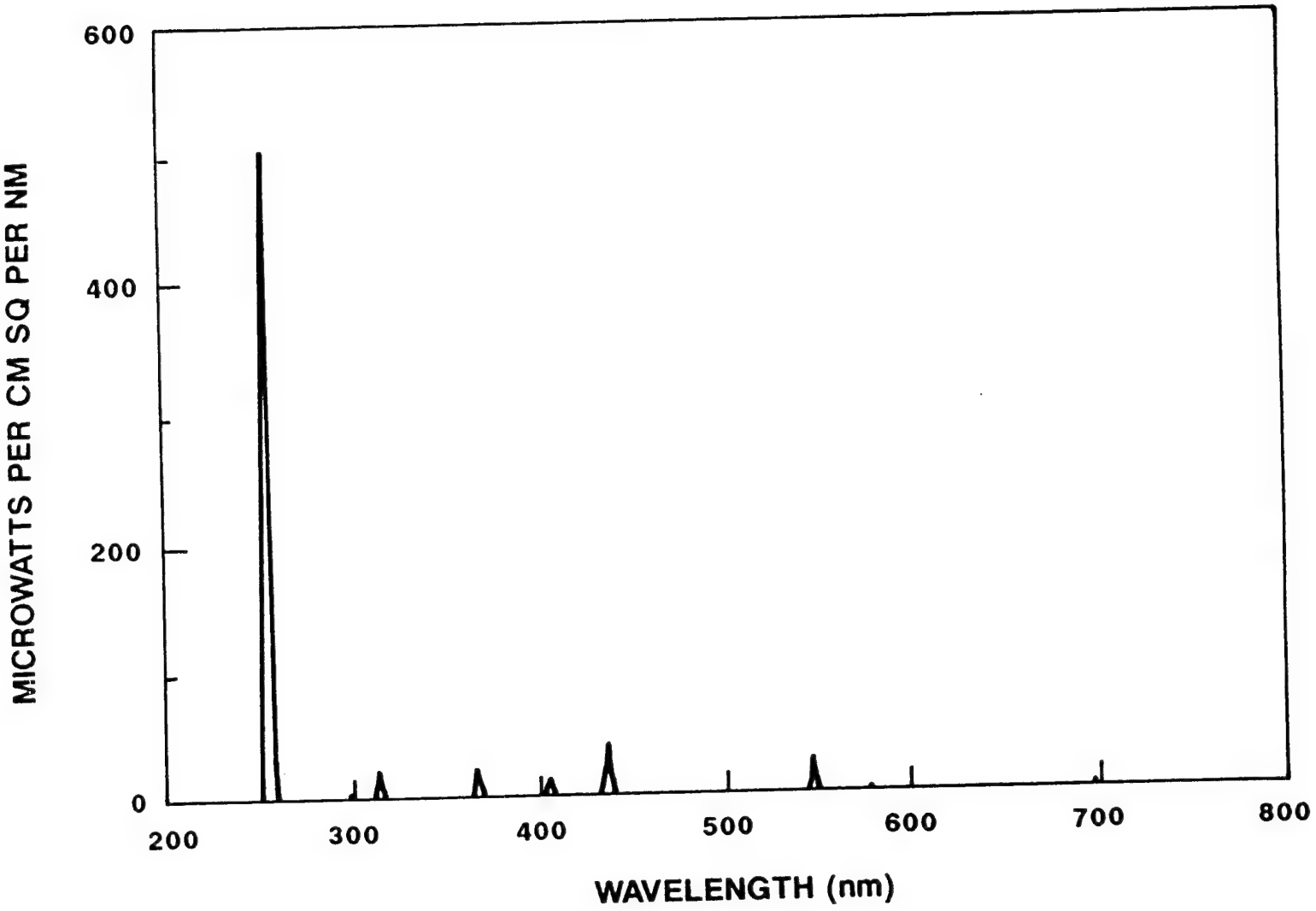

Figure 10

Intensity Versus Input Power of the 254 nm, 436 nm and 546 nm lines in the Liquid Electrode Lamp

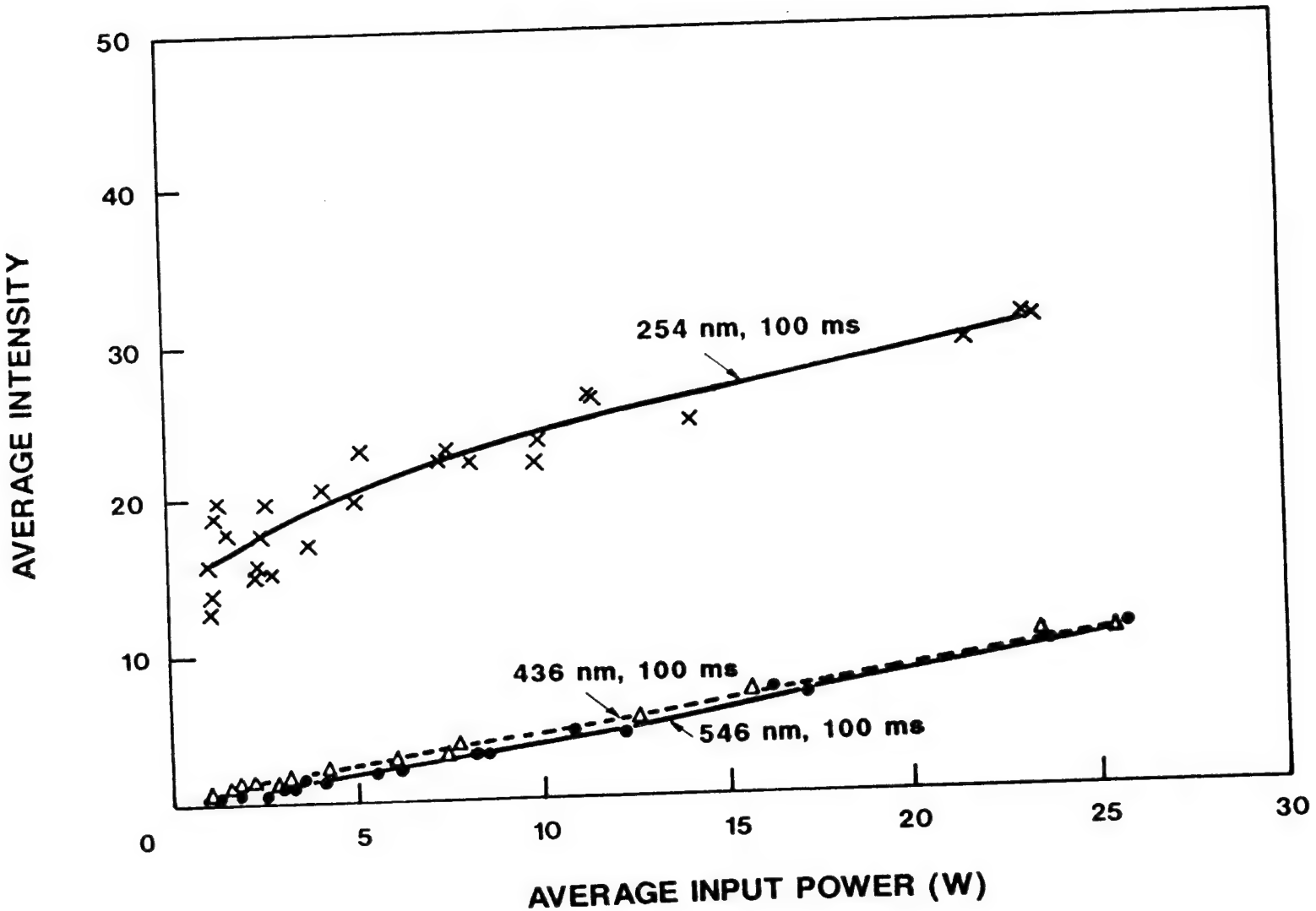

Figure 11

Ratio of the 254 nm UV Line to the 436 nm and 546 nm Visible Lines in the Liquid Electrode Lamp

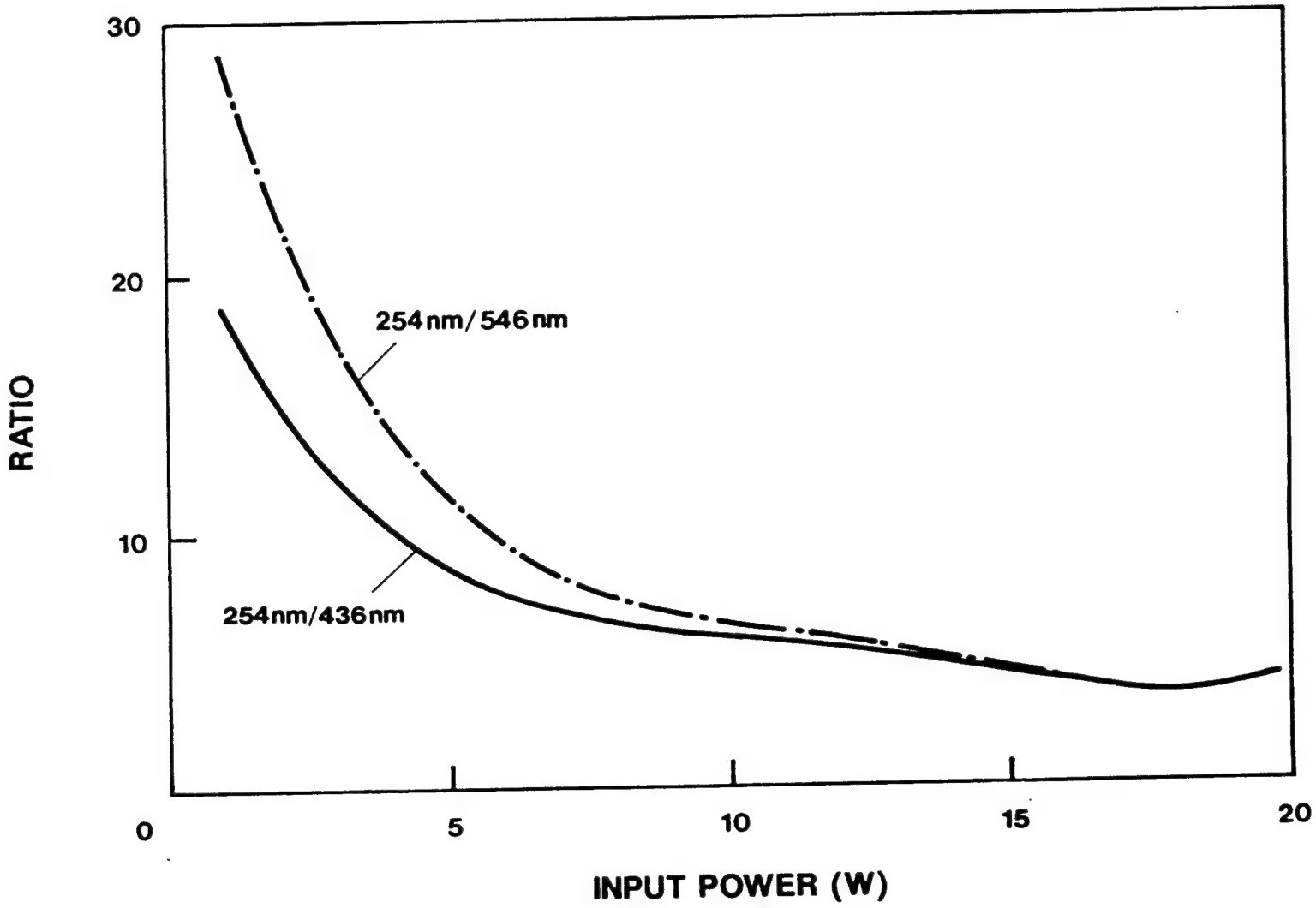

Figure 12

convective cooling of the capsule, thereby lowering its temperature; which, in turn, lowers the vapor pressure of the mercury which increases the proportion of uv emission compared to visible. The data imply that this effect overpowers any possible absorption of the short wave uv by the air.

4.1.3 Phosphor Evaluation

The best red emission comes from the combinations of the 2340 + 2364 phosphors, the 2340 + 2390 phosphors and the 2340 phosphor. Although the Dayglo paint utilizes the blue and green visible emission from the mercury spectrum, it seems to absorb about the same amount of red light as it emits; so that the net effect is to break-even. Although the 4381 phosphor has the second highest emission when used with the red beacon filter, it is a yellow phosphor and the chromaticity coordinates are far away from the values required by the IALA Bulletin #72-1977-4, Recommendations for the Colors of Light Signals on Aids to Navigation.

The best green emission is given by the 2285, 2293 and 4381 phosphors.

None of the yellow phosphors tested had an acceptable yellow color. Instead, the best yellow emission came from the two red phosphors 2340 and 2364! The yellow phosphors tend to give a canary yellow color when viewed through the yellow beacon filter, while the required color is a deep amber.

4.1.4 Beacon Optical Compatability

In order to get a true comparison of the performance of the prototype lamps being developed and the incandescent lamps currently being used by the Coast Guard, performance was evaluated in the actual optical system for which they are intended. Therefore, the 250mm focal length beacon assembly supplied by the Coast Guard was set-up in a darkroom and several liquid electrode lamps with phosphor-coated bottles were measured. This set-up is shown in Figure 13. The lamps were powered by the Garrison supply. 500msec pulses were generated using a Dynascan model 3300 pulse generator. The pulses were generated manually, one at a time, with the voltage and current read on a Phillips model PM 3302 digital oscilloscope. The average power was calculated by taking the product of the average voltage and current. An EG&G model 550 photometer with a cosine-corrected, photopic detector head and a pulse integration module was used to measure the output of the lamps. The integration module measures the total time integrated energy of the pulse in foot candle-seconds. For comparison, the various incandescent lamps supplied by the Coast Guard were also pulsed in the beacon assembly with 500 millisecond pulses. The power was supplied by a Lambda model LP-531-FM DC power supply.

Test Set-Up for Evaluating Lamps in the Beacon

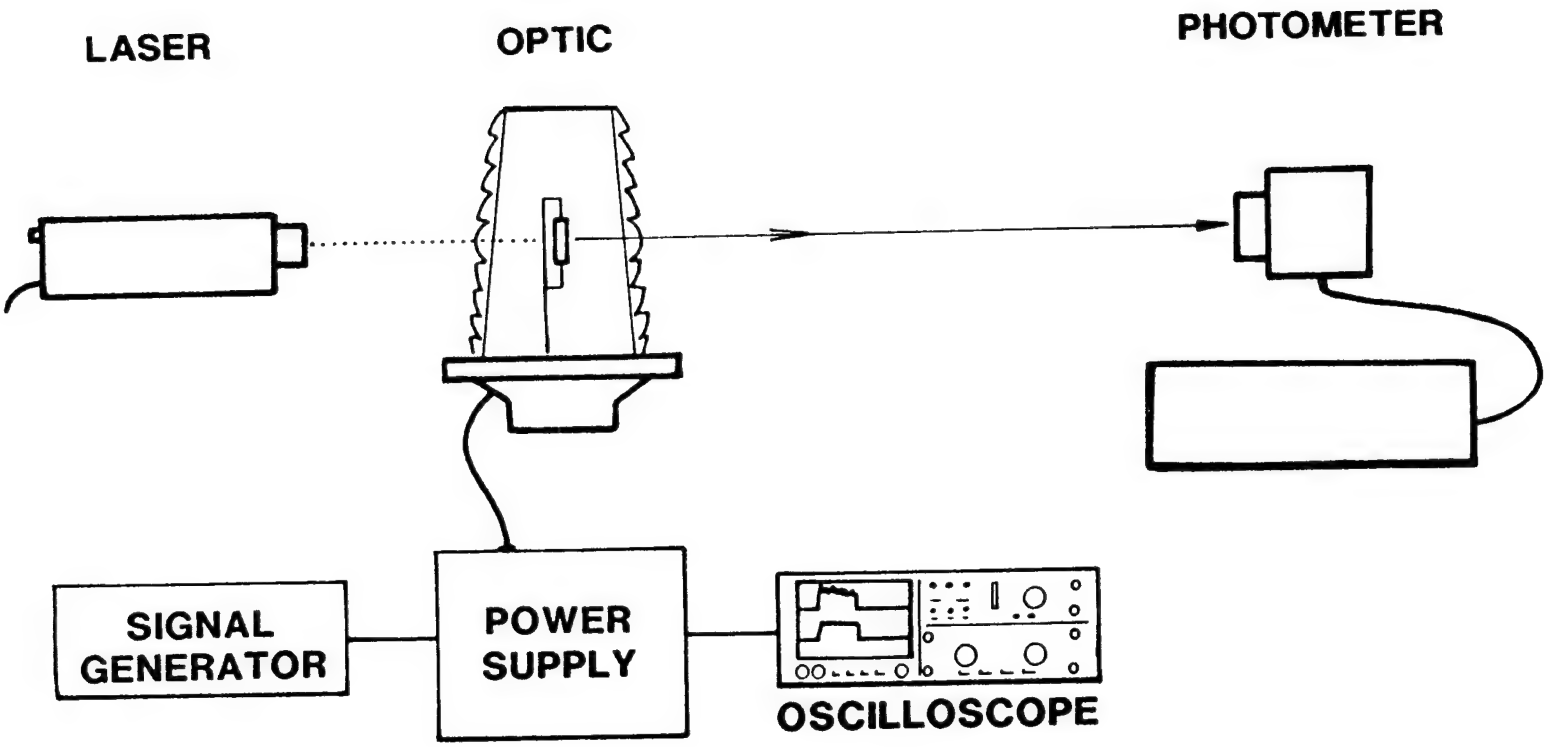

Figure 13

A test was made to determine the distance the beacon had to be from the detector before it started to appear like a point source. One of the Coast Guard's incandescent lamps was run DC in the beacon and readings were taken as the beacon was moved back from the wall. The plot of intensity versus 1/(Distance) ^{2} becomes linear at about 12m away; implying that 12m is the minimum distance for the size of the beacon not to matter.

When the liquid electrode lamp was run in the beacon with a phosphor-coated jacket or directly coated with phosphor, it was found to be a factor of 14 to 56 dimmer than the equivalent wattage incandescent lamps. These results indicate that the Fesnel lens optic used in the beacon is not optimal for coupling to the liquid electrode lamp used in conjunction with phosphors. While the use of mirrors on the capsule improves performance, it does not produce the order of magnitude improvement required.

Table 1 shows a set of measurements and calculations that we made of the surface luminance of the Coast Guard's incandescent sources and of several of the arc sources developed as part of this project. Since the total intensity in a lantern is proportional to the product of the luminance and the diameter of the source, the liquid electrode lamp should out-perform the tungsten when properly coupled to a lens.

In Appendix C is a reproduction of an article which describes the application of discharge lamps in "drum" type optics typical of beacon applications. This shows that discharge lamps can produce the required intensities when properly coupled with the optical system.

4.1.5 Life Test

A sampling of the prototype lamps have been run for an extended period of time to determine their maintenance and reliability. For this purpose, a special life test rack was developed that automatically flashes the lamps and keeps count of the number of pulses made by each one. For the purposes of the life test, the lamps were flashed at a regular interval. At an average of one second per pulse with one second between pulses, an 8,000 hour life corresponds to 14,400,000 pulses. With this duty cycle, this test requires 11 months to perform. The lamps are visually inspected on the rack at regular intervals.

It should be noted that, due to the nature of the pulsing circuit used on the life test rack, the lamps are being pulsed at about 30 watts. Since in normal use these lamps will be run at about 1 to 5 watts, the lamps are being tested under much more severe conditions than will be encoutered in the field.

At the time of this report, the lamps under test have exceeded 2 million pulses.

Table 1 LUMINANCE MEASUREMENTS

USCG	3W SOURCE (.25mm x 6mm) WHITE LIGHT LUMINANCE W/GREEN FILTER I = .05	(Tc 2540) .76 cd/mm2 .19 cd/mm2
USCG	7W SOURCE (.25mm x 6mm) WHITE LIGHT LUMINANCE W/GREEN FILTER I = .15	(Tc 2850) 2.5 cd/mm2 .58 cd/mm2

COLD SALT LAMP

SOURCE SIZE 3mm x 6mm GREEN BAND I = 5.1	1.7 cd/mm2

PHOSPHOR COATED LIQUID ELECTRODE (CW)

(ESTIMATED FROM EFFICIENCY DATA FOR FLUORESCENT LAMPS)

SOURCE SIZE 3mm x 6mm GREEN BAND I = .6	.2 cd/mm2

NOTE: LANTERN INTENSITY IS PROPORTIONAL TO THE PRODUCT OF LUMINANCE AND DIAMETER.

4.2 Two Pool and Capillary Pool Lamps

4.2.1 Two Pool Lamp

Lengthening the arc gap of the liquid electrode lamp should increase its emission. However, if the vertical extent of the arc is too great, then it will not couple efficiently to the beacon optic. To get around this problem, a lamp was made in which the arc was "folded over" in the lamp by having two pools of mercury separated by a barrier. This design is shown in Figure 14.

Because of the extremely long arc length, the lamp was difficult to pulse. Also, the press seal had a tendency to break. Because the lamp is extremely difficult to fabricate, we did not feel that the effort of developing it was warranted within the time constraints of the contract.

4.2.2 Capillary Pool Lamp

Our tests with the beacon indicate that a narrower source would couple more efficiently with the Fresnel lens optic. Therefore, an extremely thin, capillary lamp was made with a small pool of mercury at the bottom. This also has the advantage that it uses much less mercury.

Because of the small amount of mercury, surface tension effects tended to dominate; causing the mercury to form into a ball. When the lamp was pulsed, the arc propagated around the ball of mercury to the base of the in-lead electrode; preventing enough of the mercury from vaporizing to form a good arc. This approach however shows a great deal of promise. If the tube is made wider so that the mercury can completely wet the bottom of the lamp it should provide the desired characteristics. The capillary lamp was made very late in the project and there has not been enough time to refine its design. However, we believe that it should be pursued as part of Phase II of this project.

4.3 Gas Lamp

To enhance the emission in the color of interest, a rare gas was added to the liquid electrode lamps. The radiation from the gas reinforces the emission from the phosphor.

4.3.1 Liquid Electrode Lamp with Neon Fill Gas

In order to increase the red emission, a liquid electrode lamp was made using neon for the fill gas instead of the usual argon since neon radiates strongly in the red.

TWO POOL LAMP

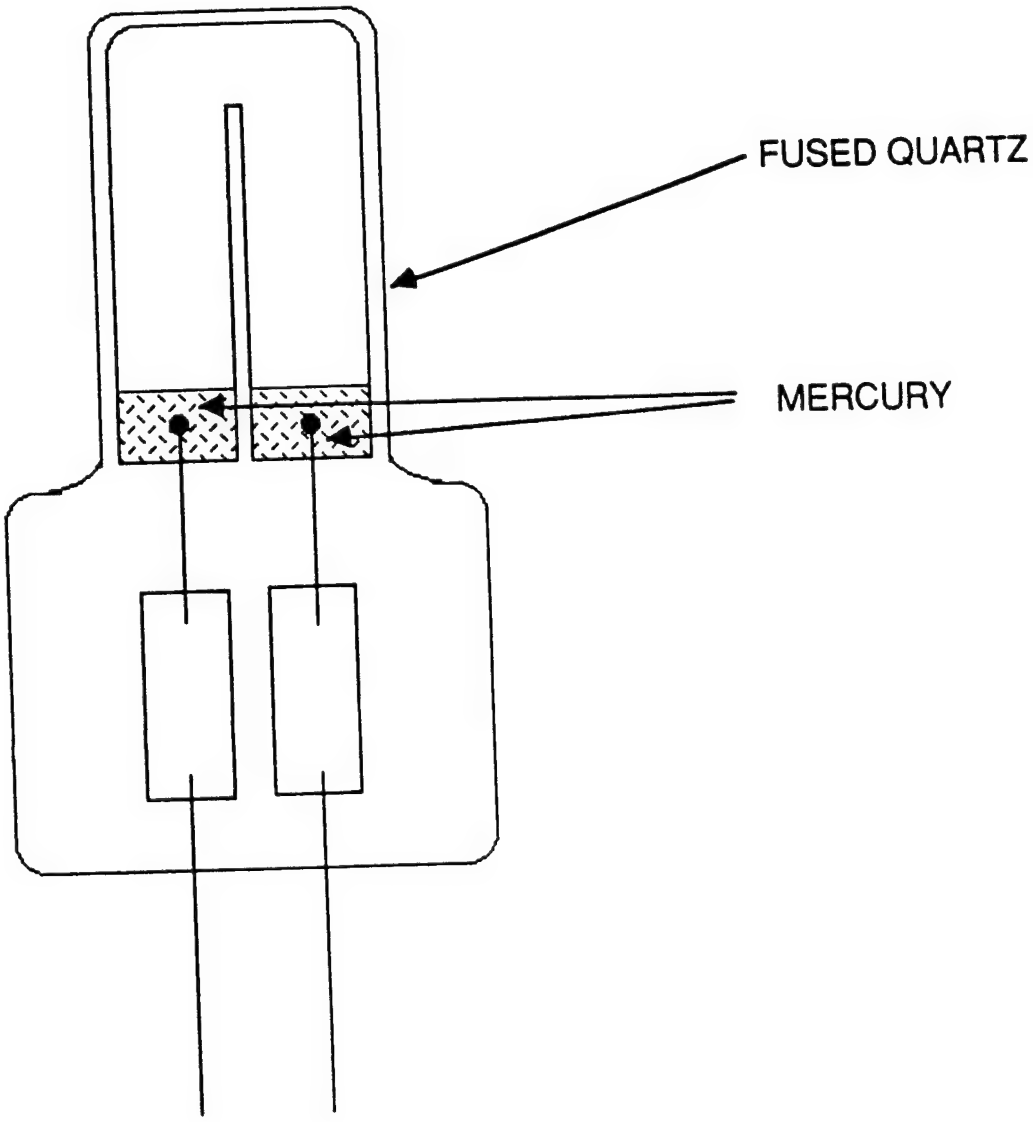

Figure 14

A spectrum of the lamp recorded with the OMA is shown in Figure 15; which shows that there is a great deal of red emission in addition to the mercury emission in the blue and green. Observation of the lamp when it was pulsed indicated that the red emission was coming entirely from the area just above the surface of the liquid electrode. To verify this, a spectrum of the lamp was taken with the top portion of the lamp masked-off. The mercury lines are almost entirely absent, indicating that the emission along the surface of the pool is almost entirely neon.

The time dependence of the emission was measured using the PMT. In this test, the lamp was pulsed with a 100 millisecond pulse. It showed that there is a strong afterglow which lasts approximately 50 milliseconds. To determine the source of the afterglow, a narrow band pass filter centered on the 436nm line of mercury was placed over the PMT. When this was done, the afterglow disappeared; showing that it was coming from the neon. The red beacon filter was then placed over the PMT to allow only the neon emission to pass through. The neon emits at a low level for about 60 milliseconds and then rises over the rest of the pulse until the input power is terminated. It then decays exponentially with a decay time of about 40 milliseconds. From this, it can be concluded that the mercury stimulating the phosphor will provide the bulk of the output during the early part of the pulse and the neon will provide significantly to the output only for pulses longer than about 100milliseconds. The UV emission of the mercury is most efficient for extremely short pulses (approximately 100 microseconds), in which time the neon is hardly even beginning to emit.

Because of the afterglow, when the lamp is run in a rapid pulse mode the neon emission is quite high. This mode of operation is characterized by a high voltage and low current; indicating that the arc is failing to develop and the lamp remains in the glow mode. Apparently, the mercury does not have a chance to ionize strongly enough to form an arc; so that more of the energy can go into exciting the neon.

Measurements taken in the test box showed that the uv emission of the lamp increased dramatically for pulse widths less than 15 ms and continues to improve down to the microsecond regime. To take advantage of this, we have developed a "pulse modulation" circuit that pulses the lamp with a train of 100 microsecond pulses with at 10% duty cycle (100 microseconds on, 900 off). Figure 16 is a schematic of this circuit and Figure 17 shows its pulsing signal. The signal is then made by stringing together these pulses to add-up to the total signal time. This is shown in Figure 18. Since the time between pulses is less than the relaxation time of the plasma in the lamp; there is no stress on the lamp during the pulse train since it is not really being restarted.

The Ne/LE lamp was then placed in the 250mm beacon supplied by the Coast Guard and run using the pulse modulation circuit to determine its efficiency in coupling to the Fresnel

Spectrum of the Mercury Neon Lamp

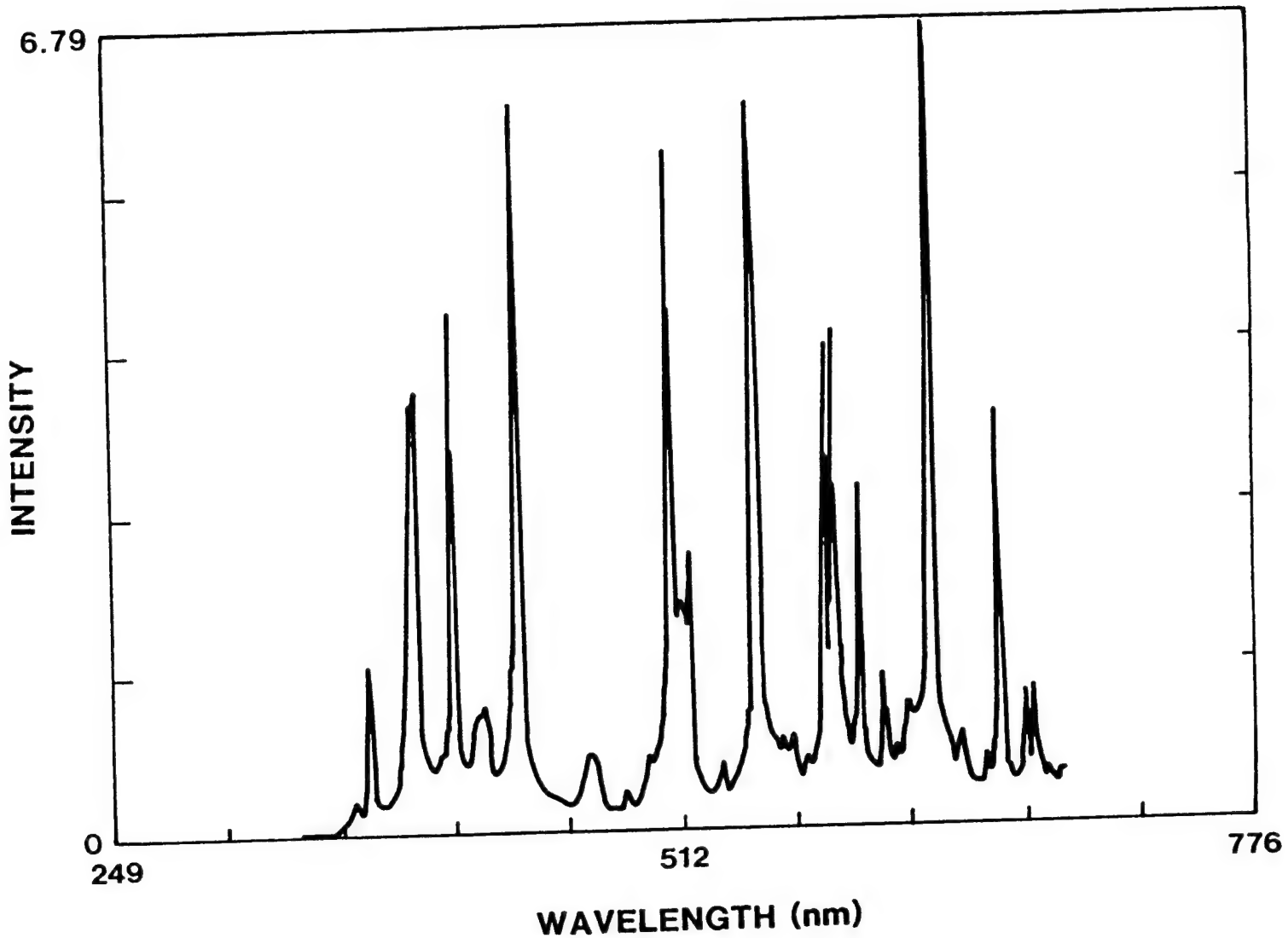

Figure 15

Schematic of the Pulse Modulation Circuit

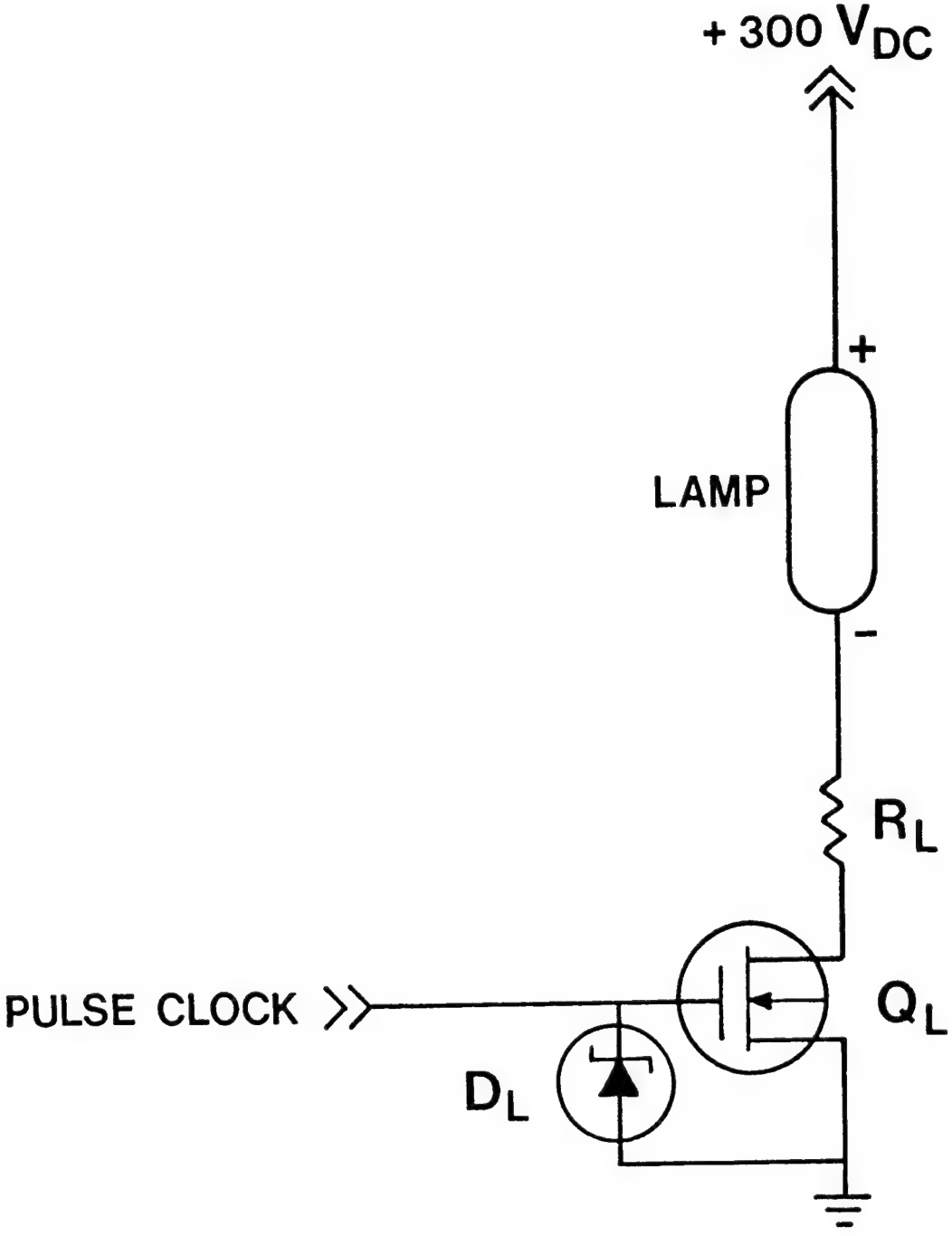

Figure 16

Output Signal of the Pulse Modulation Circuit

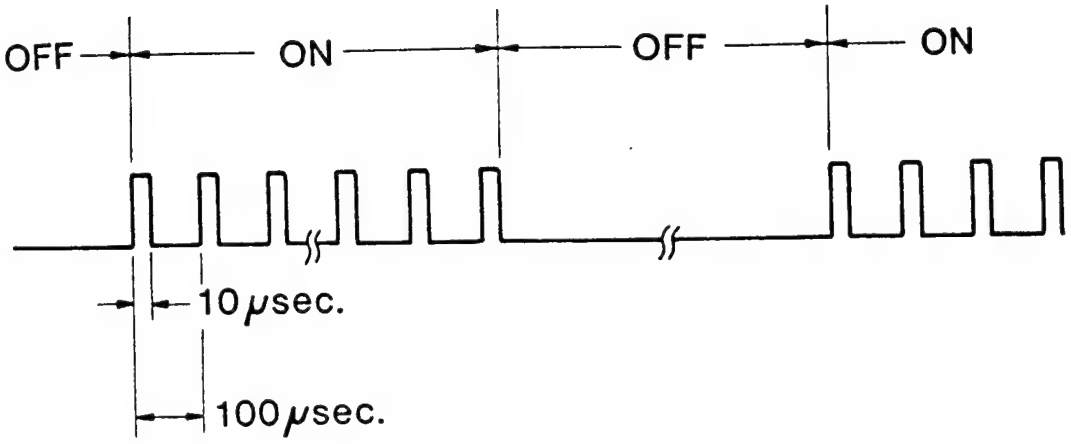

Figure 17

LE/NE Pulsed Source Light Output

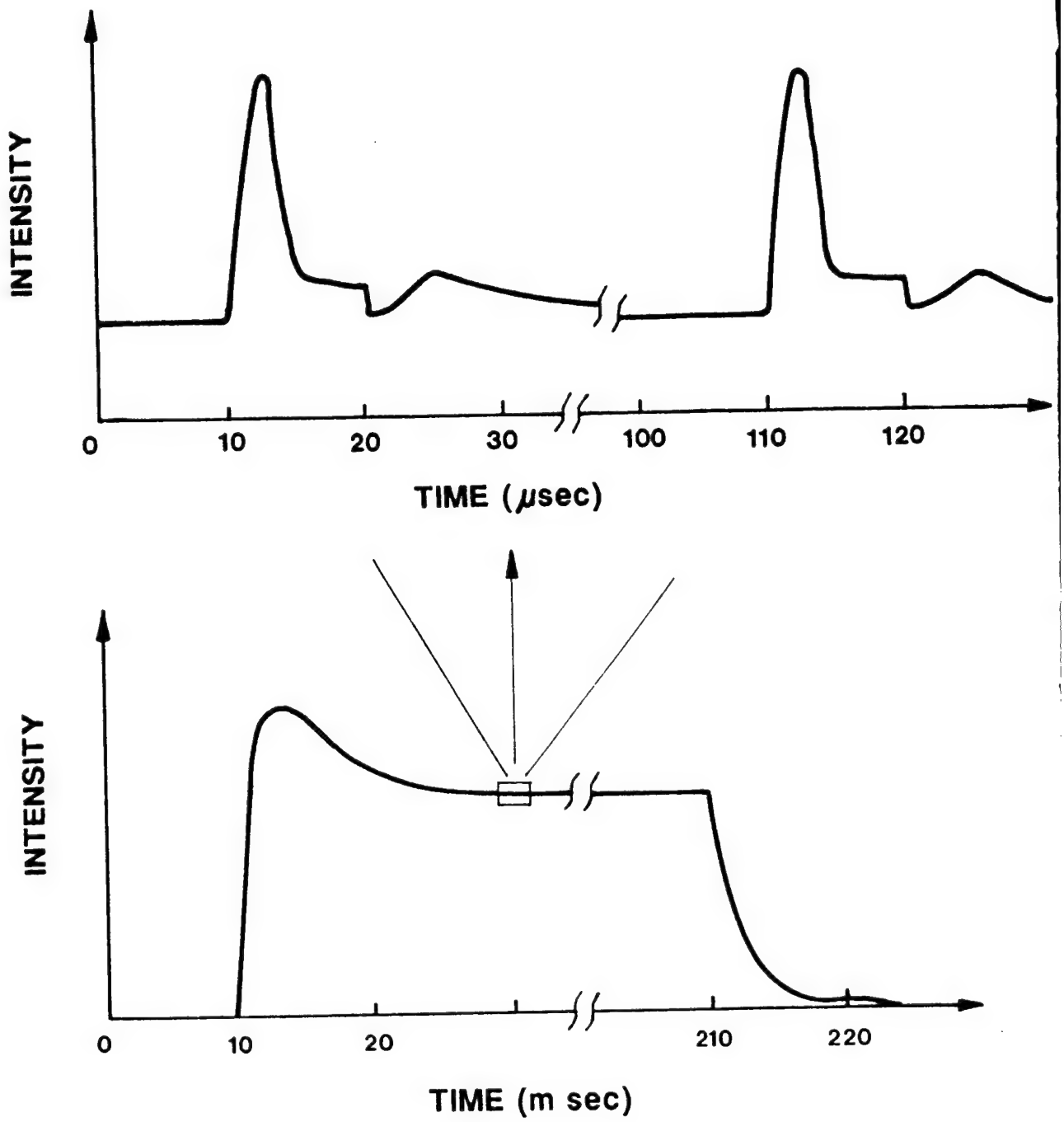

Figure 18

lens optic. The lamp was run with a pulse width of 500ms. The total time-integrated emission was measured with an EG&G model 550-1 photometer with a 550-1 pulse integrator and the model 550-18 photopic cosine detector head. Alignment was made with the brightest part of the illuminated band on the wall of the darkroom. The long pulse width was necessary to get an adequate signal for the integrator to measure. A piece of the red beacon filter was placed over the photometer to ensure that the lamp was pulsing red. Without the use of any phosphors (i.e.; using just the red emission of the neon), the neon lamp, running at 0.09 watts was 63% as bright as the 3 watt incandescent lamp. This implies that when the lamp is run at one watt, it should significantly out-perform the tungsten.

4.4 Liquid Electrode Lamp Under Continuous Operation

When run in the rapid pulse mode described in Section 5.3.1, the liquid electrode lamp and its variations can be run with any arbitrary pulse characteristic since the pulse duration is made-up by stringing together the requisite number of 10 microsecond pulses. Because of the low duty cycle (10%), the lamp does not heat-up and it can be pulsed indefinitely to make it appear to be running continuously.

5 SUMMARY

During the contract period the Lighting Systems Group of GTE has fabricated and evaluated hundreds of discharge sources. Nearly a dozen distinct approaches have been investigated, each requiring custom construction.

From the analysis procedures set forth in the "Test Plan" operational parameters were determined and used to redesign the sources under investigation.

While many of the sources considered have unique and interesting properties which could be exploited for color source signal applications, no single source was found to meet all of the initial objectives. It was discovered, however, that some of the sources are competitive with tungsten and provide overall improved performance.

The most versatile source is the liquid electrode lamp. When operated in a pulse-modulation mode this lamp produces 6 times the intensity in certain color bands as tungsten at low wattage (e.g; 3 watts). Although the liquid electrode lamp does not couple efficiently with the present Coast Guard beacon optics, the best total system efficiency tests indicate that a 1 watt average power liquid electrode lamp in the 250 mm optic will match the performance of the 3 watt tungsten source in the same optic. When life, reliability, and source ruggedness are considered the liquid electrode lamp system is superior to and will out-perform the tungsten sources. It is likely that making this lamp narrower will improve its optical coupling and this should be pursued as part of Phase II of this project.

For continuous operation the conventional metal halide lamps offer the best source. Unfortunately the lowest wattage halide lamp presently available is 30 watts. The possibility of efficient operation of metal halide discharge lamps at powers as low as 1 watt is remote. Pulse modulation at 1 watt with the liquid electrode lamp can be maintained continuously. Thus, at low wattages, it provides a source that can easily meet all operational and flash requirements.

Table 2 shows the results of measurements made of the efficiencies of the Coast Guard's incandescent lamp and of the liquid electrode lamp with the colored beacon filters. At one watt the liquid electrode lamp is over three times as efficient in the green and 5 times as efficient in the red. It should be noted that as the wattage of an incandescent lamp decreases, so does its efficiency; so that at one watt, it will have a lower efficiency than the figure in the table. Also, these measurements were made with the tungsten lamp running in a continuous mode. As described in Appendix B.2, incandescent lamps require a finite length of time to warm-up, lowering their efficiency even more for short pulses. The measurements on the liquid electrode lamp were made with it being run in a single pulse

mode. We expect the performance to be better for the neon lamp run with the pulse modulation circuit.

Overall, we predict a better than 90% probability of being able to develop a red source that meets the Coast Guard's requirements, a 75% probability of being able to develop a green source and a greater than 50% chance for a yellow source.

All the critical parameters of the major source categories evaluated under this contract is presented in Table 3.

Table 2 **EFFICIENCIES IN COLORED BANDS**

$$= \frac{\text{Total Power Radiated Over All Space}}{\text{Input Power}}$$

GREEN

5W Tungsten Lamp:		4%
Liquid Electrode Lamp with Green Phosphor at	5W:	4%
	2W:	7%
	1W:	14%

RED

5W Tungsten Lamp:		2%
Liquid Electrode Lamp with Red Phosphor at	5W:	1.5%
	2W:	5.5%
	1W:	10.5%

Above does not take into account the sources' efficiencies in coupling to the beacon optic

Table 3 **COLOR SOURCE SUMMARY**

	METAL VAPOR	SOURCE COLD SALT	MERCURY POOL	METAL HALIDE
COLOR AVAILABLE				
A. Red (610-700nm)	no	yes	phos	yes
B. Green (500-550nm)	yes	no	phos	yes
C. Yellow (580-595 nm)	yes	yes	phos	yes
INBAND EFFICIENCY				
A. Red	.5-1%	2-3%	1-4%*	6%
B. Green	.2-.5%	na	1-4%*	5%
C. Yellow	1-2%	3-4%	1-4%*	11%
POWER RANGE				
A. Pulse duration (MS)	1-50	1-50	0.1-500	n/a
B. Pulse frequency (/S)	0-.2	0-.2	0-.2	n/a
C. Wattage (W)	5-50	5-50	0.35-6	45
PARAMETERS OF DISCHARGE				
A. Vertical extent (mm)	6-12	6-10	4-6	7
B. Horizontal extent (mm)	3	3	3-10	3
OPERATIONAL PARAMETERS				
A. Pre-conditioning	yes	yes	no	yes
B. Pulse repeatability	--	~75%	>99%	n/a
C. Lifetime	--	>10K	>2m	4000 hr

*Based on comparison of line-of-sight measurements of discharge to USCG lamps assuming .8% inband efficiency.

6 REFERENCES

1) GTE Lighting Products Corp. 1980. Light Source Applications - Designers Handbook. Danvers, MA.

2) Aids to Navigation Technical.Chap. 6, COMDTINST M16500.3 11 Sept. 1979.

3) "Recommendations for the Colors of Light Signals on Aids to Navigation." IALA Bulletin 1977-4 No. 72. December 1977.

4) J.J. de Groot and J.A.J.M. van Vliet. The High Pressure Sodium Lamp.Philips Technical Library. Antwerp.

5) U.S. National. Bureau of Standards. 1980.Wavelengths and Transition Probabilities for Atoms and Atomic Ions. NSRDS-NBS 68. Washington, DC.

6) C. Kittel. Thermal Physics. John Wiley and Sons, Inc. New York. 1969.

Appendix A LITERATURE SEARCH

In December 1987 a computerized literature search was conducted to find information on previous research on pulsed arc lamps. This is in compliance with Section 3.1 of the contract. The search was conducted through the Computerized LIterature Search Service (CLSS) of the library at the Massachusetts Institute of Technology. The CLSS works through the Dialog network; and uses four databases:

1. Inspec – The Electrical Engineering and Physics Database Indexes 4,000 journals from 1969 to the present, 750 of which are completely indexed.

2. Compendex - The Engineering Database Indexes 5,000 journals and 2,000 conferences per year from 1969 to the present.

3. NTIS - The index of government reports.

4. Derwent - World Patents Index 1981 to the present.

Two different searches were conducted. The first search looked for articles on arc or discharge lamps crossed with "pulse" and the following keywords in various combinations:

red	chromaticity	Hg or mercury
green	spectra	low pressure discharge
yellow	metal vapor	gas discharge
color	metal halide	

Articles on the following subjects were then eliminated from the list:

ballasts	lasers	phosphors
circuits	fabrication	fluorescent lamps
starters	construction	

This search turned up only 3 articles of potential use; indicating that almost no work has been done on pulsed arc lamps in our area of interest.

In the hope that information on pulsed discharges may appear in the literature in an area where the phenomenon is unwanted, the second search looked for articles on switches and plasma switches crossed with the following keywords:

mercury arc spark transient

Articles on gas diodes and thyratrons were also explored. This search turned up 5 articles of potential use.

Copies of these (8) articles were obtained from the M.I.T. libraries. After studying them, it was determined that none of them contained any information that is applicable to the work being performed.

Appendix B EXPERIMENTAL TEST SET-UPS

B.1. Laboratory Test Set-Up for Intensity Measurements

For detection of the time dependent emission from a test source, a photomultiplier tube (PMT) with narrow band pass interference filters (IFF) is used. The PMT is calibrated against a tungsten-halogen reference lamp; which has been pre-calibrated by GTE's Tests and Measurements department. A tungsten-halogen lamp is used because this type of lamp:

1. is a gray radiator; which means it has a continuous spectrum over the entire visible spectrum.

2. has great repeatability from light-up to light-up (+/- 1%)

3. has minimal depreciation in output over life (<5% decline in output over life).

The lamp being used was chosen to have a similar geometry to the test lamps and typical lamps used in the signal beacons.

In general, the response of a photomultiplier tube (PMT) is wavelength dependent. Because of this, when measuring a monochromatic light source, the PMT must be calibrated in the same wavelength band as the test lamp. To do this, a narrow band pass filter centered at the wavelength of interest is placed between the PMT and the reference lamp. This eliminates all light outside of the region of interest. Since the test lamps are also operated with this filter in front of the PMT, the spectral transmission curve of the filter is automatically taken into account.

To establish an absolute calibration of the system, spectral power distributions (SPD's) are taken of the reference lamp with the narrow band pass filters in front of it using a Jerrell-Ash 0.3 meter monochromator. The spectra are then integrated to give the total line-of-sight power from the reference lamp transmitted through the filter (over the band of interest). The reference lamp is then run in the test setup with the filter in front of the PMT. The conversion factor for microwatts of light in that wavelength band per millivolt output of the PMT is then given by:

$$\frac{\text{Microwatts of Light through Filter with Reference Lamp}}{\text{Millivolts Reading on the PMT with Reference Lamp}}$$

The test setup provides a very small solid angle (3.465×10^{-3} steradian) for measuring the line-of-sight output of a lamp. To calculate the actual efficiency of the lamp, its output over all

space must be determined. In order to do this, a metal halide lamp with the same geometry as the test lamps being used in this project was photometered line-of-sight and in an integrating sphere. The integrated output was divided by the line-of-sight intensity to obtain a conversion factor for use in determining the total output of the test lamps.

For determination of the full visible spectrum, an optical multichannel analyzer (OMA) is available. This instrument does not resolve the time dependence of the light emission of the lamp. To calibrate the OMA, a full spectrum spd was taken with the Jerrell-Ash monochromator of the reference lamp without any filters. The OMA then takes 31 points of this spectrum as input to generate a full calibration spectrum, filling in the rest of the curve by interpolation. Since the tungsten-halogen lamp has a continuous, slowly varying spectrum, this gives a sufficiently accurate calibration. At the beginning of each session with the OMA, the reference lamp is then run to generate a calibration curve.

For detection of the electrical signals, accurate voltage and current probes are used. These probes are calibrated using a high voltage pulse generator (Velonex) as a source and a precision low inductance resistor as a load.

B.2 The Coast Guard's Incandescent Lamps (Benchmark)

The light output of a tungsten filament is very strongly dependent on its temperature (the radiated power goes as T^4). In addition, a finite length of time is required for the filament to heat-up when power is applied to it. In order to determine the effects of this finite rise time on the performance of the incandescent lamps currently used by the Coast Guard for comparison to our pulsed arc sources, a study was performed in which pulses of varying lengths were applied to one of the 0.25 amp (3.0 watt) incandescent lamps and its intensity was measured as a function of time and pulse width. Because the emission of a tungsten lamp is primarily in the red (and infrared) and because the spectrum shifts towards the blue with increasing temperature, the output of the lamp was measured both without any filters (white light) and with the Coast Guard's green beacon filter to see if there was a significant difference in behavior due to the color observed.

In this test, the lamp was mounted in the test box described in Section B.7.1. The pulse was applied to the lamp by a switch controlled by the IBM PC/XT computer. During the pulse, a constant 12 volts was applied to the lamp by a Lambda model LP-531-FM DC power supply. The intensity was measured using a Hamamatsu R2066 photomultiplier tube (PMT). The lamp voltage, current and intensity as a function of time were then read with a LeCroy transient waveform recorder.

The voltage, current and intensity of the lowest and highest wattage lamps are plotted in Figures B-1 and B-2. Except for an extremely short spike due to jitter in the switch when it closes, the voltage is perfectly flat during the entire pulse. The current has a leading spike about 10ms long and then flattens out to a constant value after about 30ms. This spike occurs because the resistance of the filament is very low when cold and then increases as it heats-up; causing an initial current surge at constant input voltage. The intensity rises over a period of about 100ms to a constant value and then takes about 30ms to drop-off again as the filament cools after the input power is discontinued.

The intensity of the lowest wattage lamp averaged over the entire pulse is plotted in Figure B-3. Due to the 100ms rise time of the output, it takes a pulse about a second for the average intensity to reach 90% of its continuous operation (CW) value; although it reaches 87% of that value after about half a second; which is the shortest pulse likely to be encountered in practice. Figure B-4 shows the average intensity divided by the average input power (which is a measure of the efficiency) as a function of pulse width. The "efficiency" reaches 83% of its CW value with a 1 second pulse width and 77% of this maximum after about half a second.

As the wattage of the tungsten lamp increases, so does the time needed for it to reach full power. As the lamp wattage increases, so does the length of the initial current surge and the rise time for the light output. For the highest wattage lamp, it takes over 300ms for the current to settle into its steady-state value. After half a second, the 37 watt lamp has just reached full intensity. In fact, it does not even begin to light-up until 150ms into the pulse.

It can be concluded that the finite rise time of the lowest wattage incandescent lamp is not significant for pulses of one half second duration or longer. For shorter pulses and for the higher wattage lamps, however, it causes a significant decrement in the output (and hence the perceived brightness) of the lamp. Since arc lamps come to full brightness in the first few milliseconds of operation, they have a distinct advantage over the tungsten source for shorter pulse durations.

B.3 Metal Vapor Lamps

In the metal vapor lamps, a metal-iodide is put inside a lamp; which is then heated to raise the vapor pressure of the salt high enough to easily sustain an arc. This lamp, along with the heating apparatus, is shown in Figure B-5. The lamps used to evaluate the different salts are double ended capsules made of fused silica. The electrodes were made out of tungsten and they were balled on the end. The inter-electrode gap was 5 to 8 mm. and the volume of each capsule was .5 to 1 cubic cm. Each lamp contained 10mg of each salt. In all cases, this assured that an excess of the metal halide was present. Each lamp also contained 100 to 150 torr of Argon unless stated otherwise.

Performance of the 0.25A, 3W USCG Incandescent Lamp

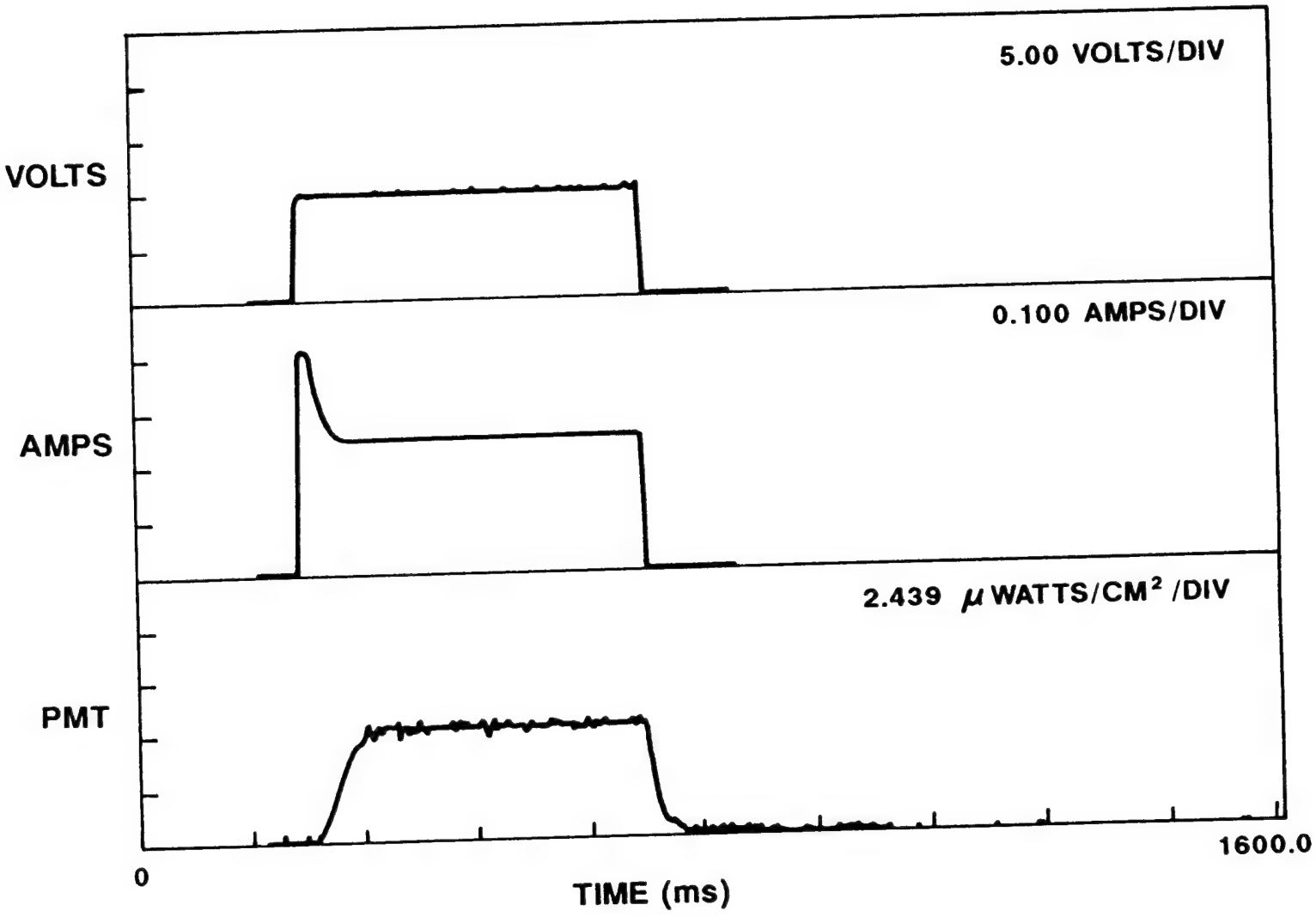

Figure B-1

Performance of the 3.05A, 37W USCG Incandescent Lamp

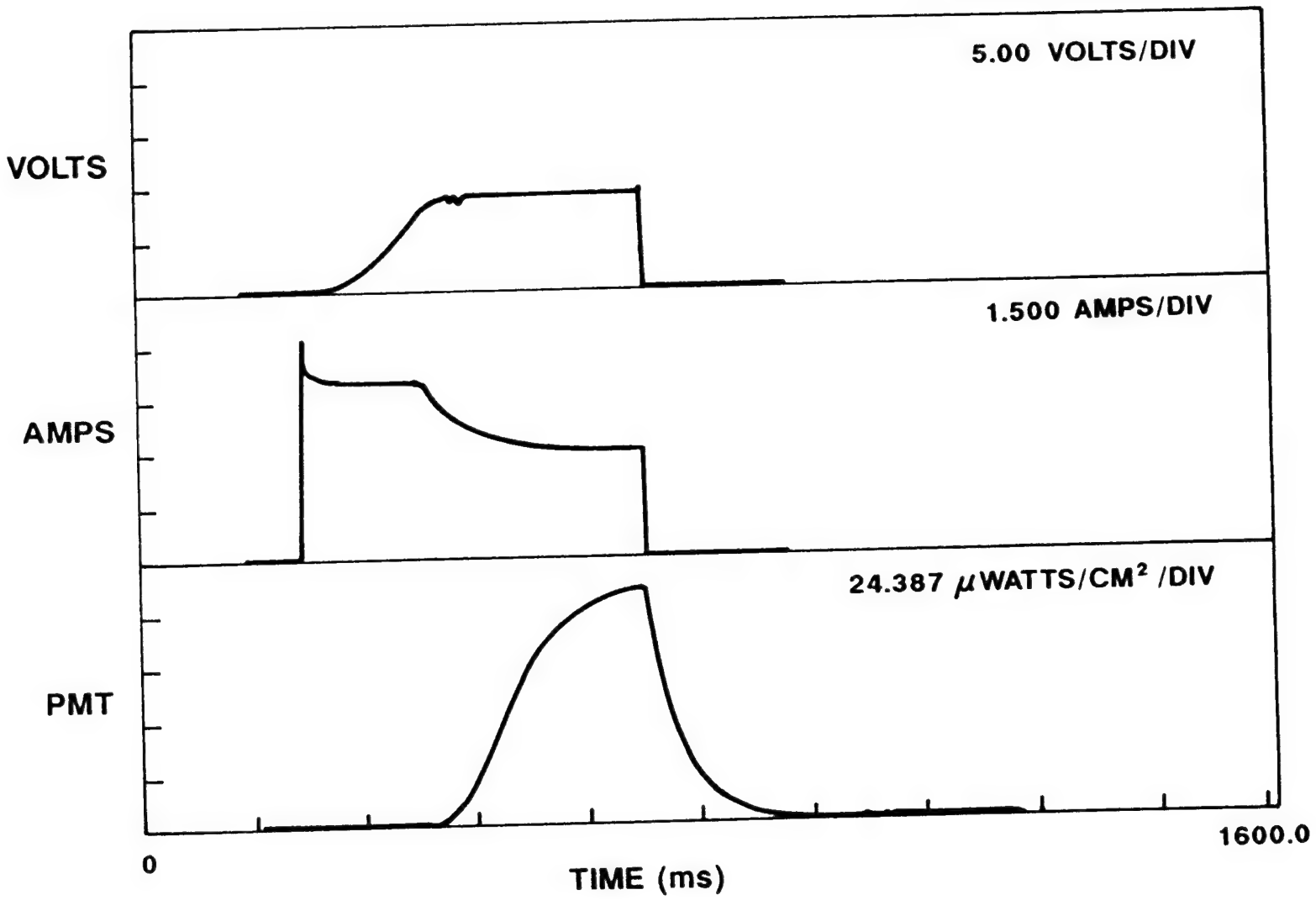

Figure B-2

Average Intensity Versus Pulse Width for the 0.25A, 3W USCG Incandescent Lamp

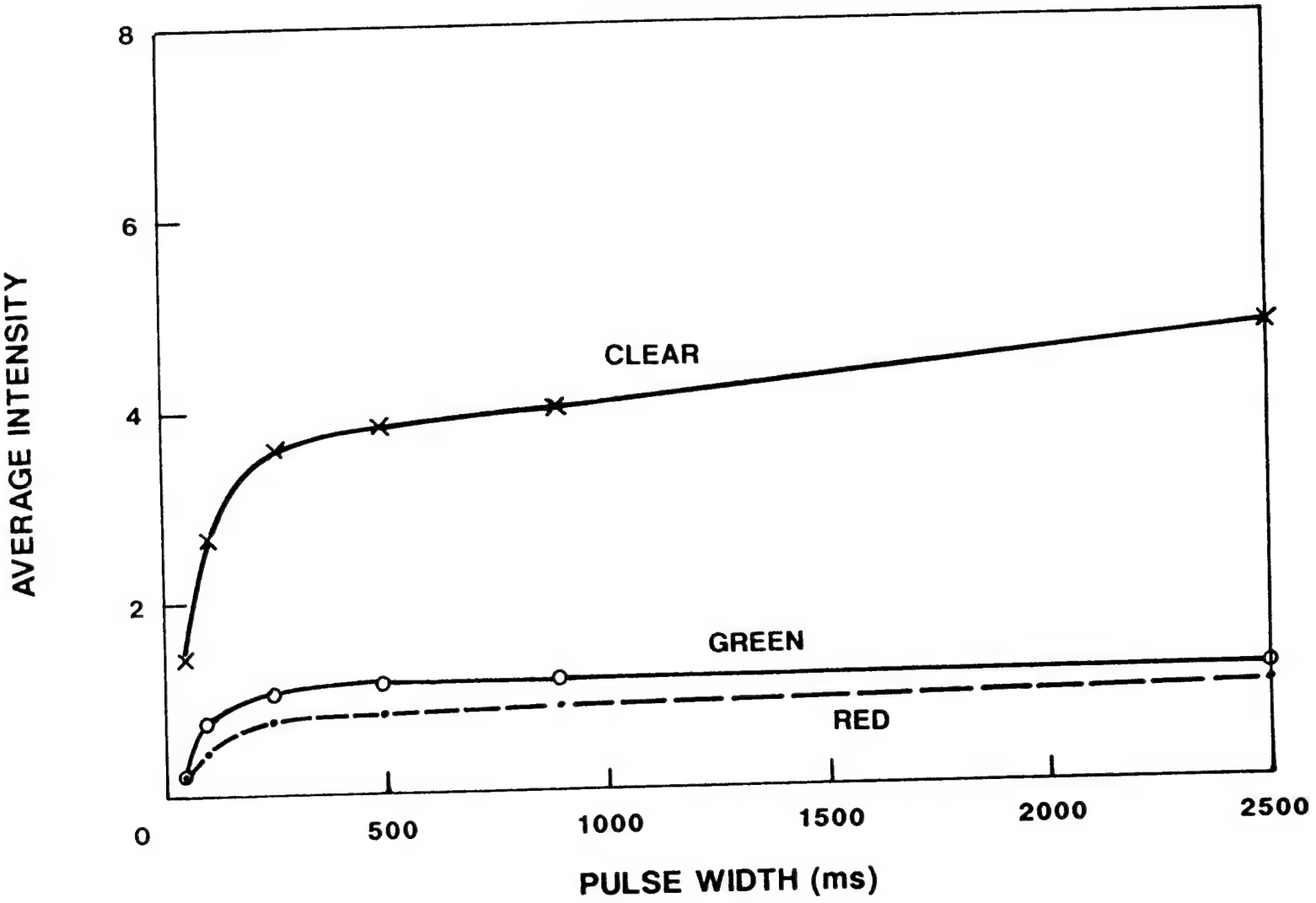

Figure B-3

(Average Intensity)/(Average Input Power) for the 0.25A, 3W USCG Incandescent Lamp

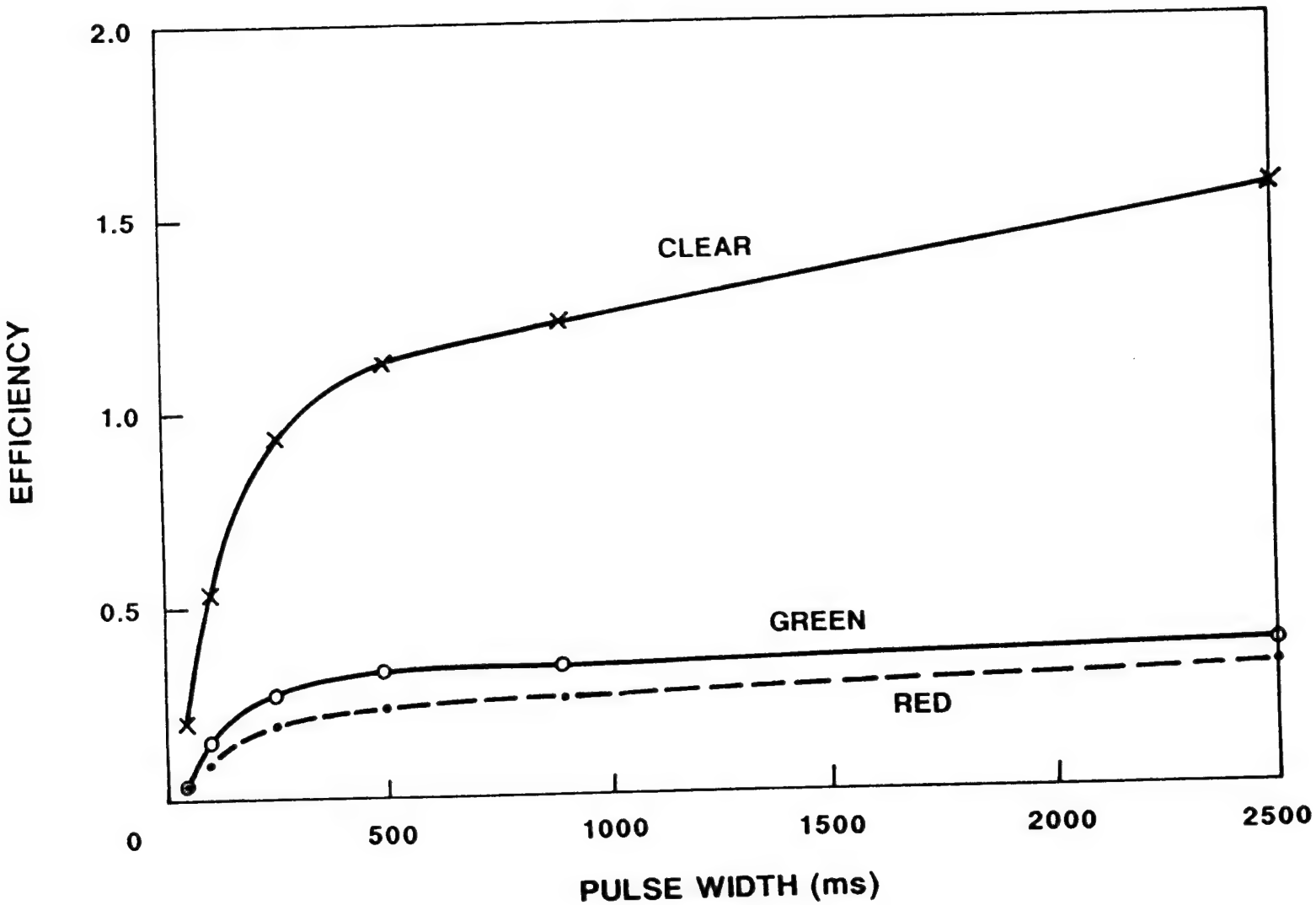

Figure B-4

Metal Vapor Lamp

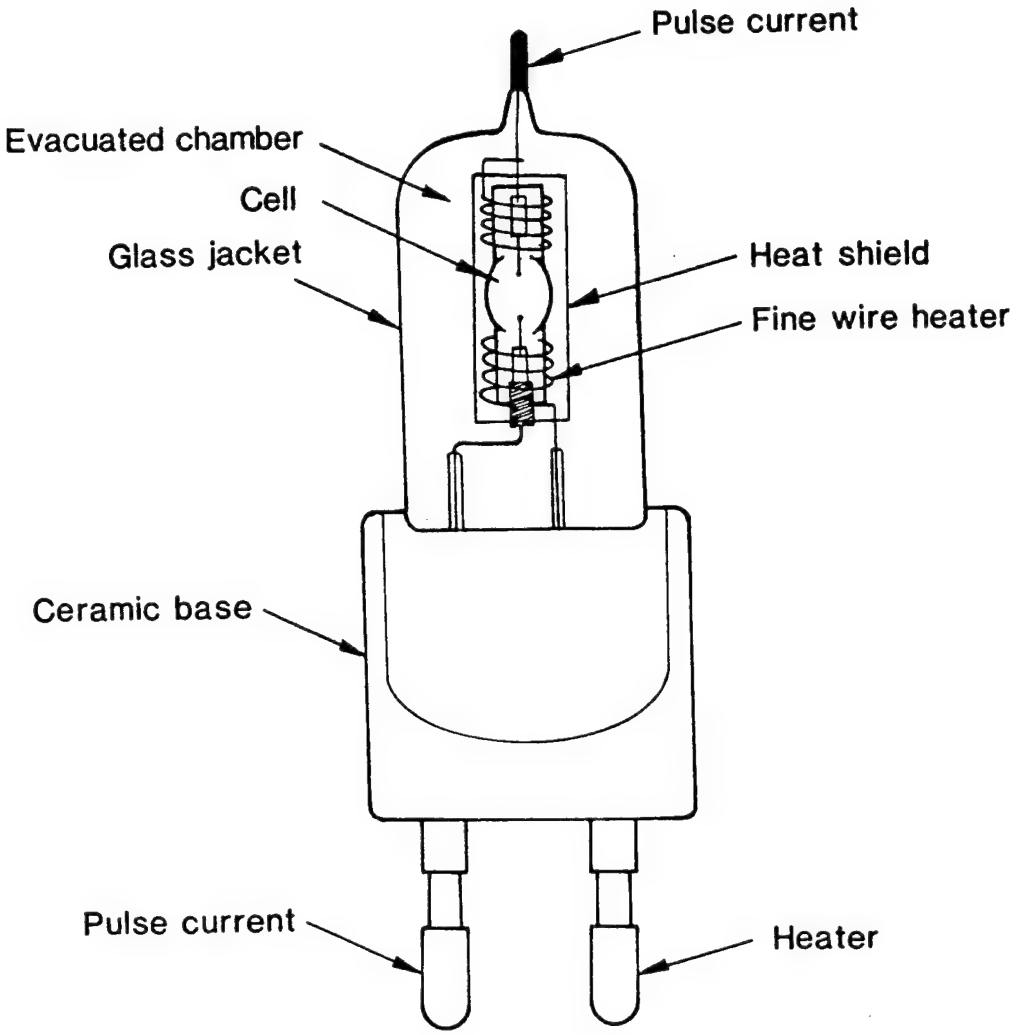

Figure B-5

The following salts were evaluated:

Sodium Iodide (Yellow)
Thallium Iodide (Green)
Lithium Iodide (Red)
Cadmium Iodide (Blue)

B.3.1 Equipment

The apparatus used to evaluate the pulsed metal vapor sources is shown in Figure B-6. The heart of the system is a LeCroy 3500 controller and the SPECT6 program , running on an IBM PC/XT which controls the firing of the lamp, the digitizing of the resultant voltage across and current through the lamp, and the scanning of the optical multichannel analyzer (EG&G OMA II).

The discharge is initiated when the computer triggers the pulse generator, set up as a one shot oscillator, to send a constant width pulse to the high power pulse generator and to the STOP input of the transient recorders onboard the LeCroy. During the discharge the current is monitored at the secondary (1 loop) coil on a Pearson current transformer, and the voltage across the lamp is monitored via the 1000X attenuator and the amplifier. The transient recorders digitize the data from the receipt of the STOP (trigger) signal until the pre-programmed number of post-trigger samples have been taken. After this the SPECT6 program reads the voltage across the lamp and current through the lamp from the transient recorders and the product of v(t) and i(t) is computed to determine the power into the lamp as a function of time. When this function is integrated with respect to time, the total electrical energy (watt-seconds) into the lamp is obtained.

The other half of the system uses an OMA, triggered by logic control in the LeCroy, to evaluate the light coming out of the lamp. The OMA acquires a spectrum for a preprogrammed number of scans and then halts. After the OMA is triggered and starts scanning the lamp is pulsed 20 to 100 times. The spectrum is then transferred to a Digital Equipment MicroVAX (via the LeCroy). Once the spectrum is in the MicroVAX and has been converted to the proper file format it can be plotted for documentation. Also, the total radiated energy for one pulse due to each transition in the species can be computed on the MicroVAX, which sums up the energy (watt-seconds) in any band of wavelengths in the spectrum.

Test Set-Up for the Metal Vapor Lamps

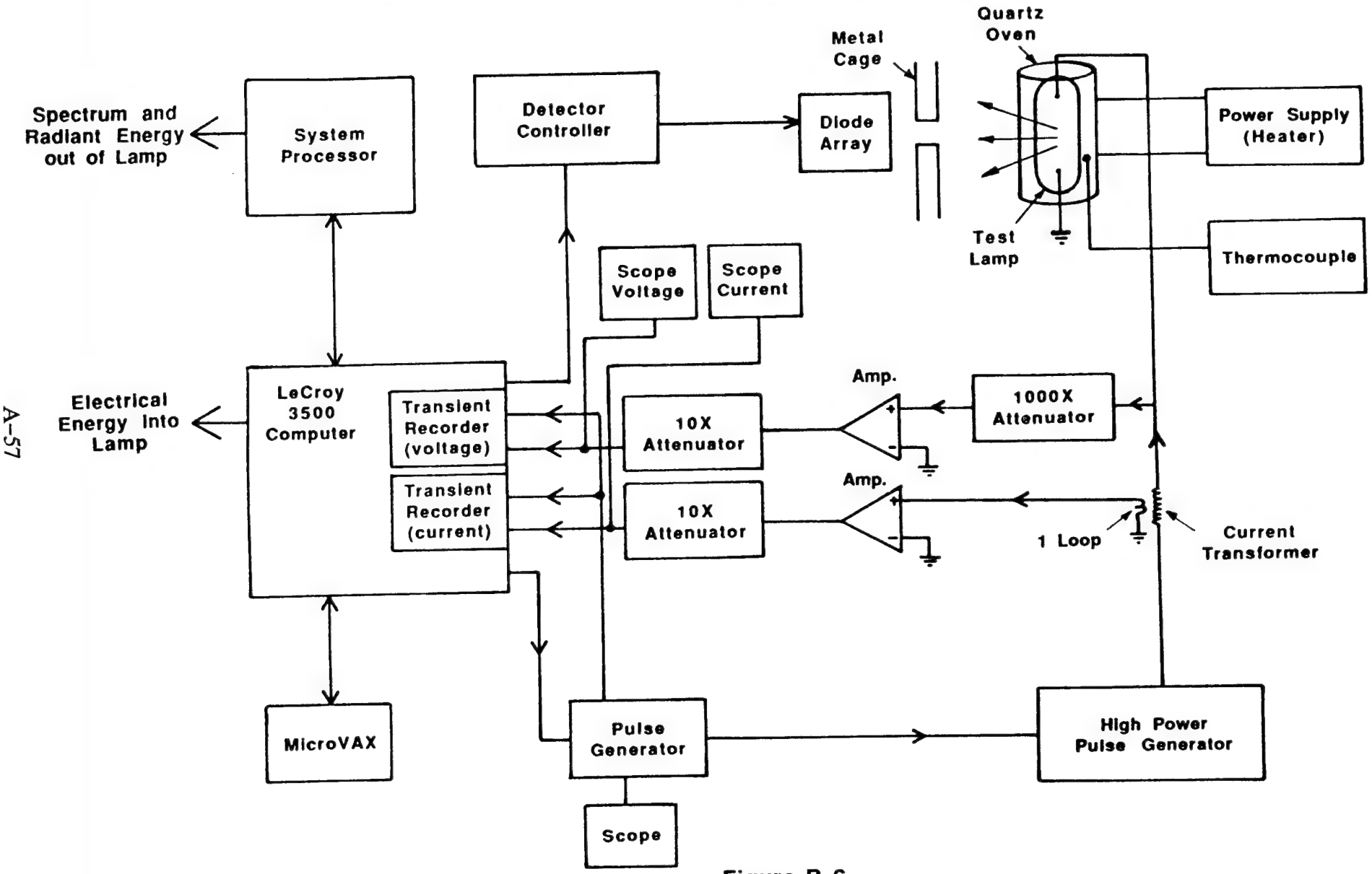

Figure B-6

B.3.2 System Calibration

Voltage:

To calibrate the section of the apparatus which measures the voltage across the lamp, a high power 400 ohm load resistor was substituted in place of the test lamp. The 1000X attenuator probe was previously calibrated with a 1 Khz, 40 volt square wave and assumed to be accurate. Knowing the voltage across the 400 ohm resistor, and knowing the voltage at the transient recorder signal input, a ratio was taken to yield the voltage across the lamp in terms of the voltage at the transient recorder inputs.

V(lamp) = V[at T-R] x (Voltage Scale Factor)/(amp gain)

Current:

To calibrate the section of the apparatus which measures the current through the lamp, a 400 ohm resistor was substituted for the lamp. Because the primary winding of the coil and the resistor (or lamp) are in series, the current through the resistor (or lamp) is equal to the current through he primary winding. Knowing the voltage across this resistor, the current through the series circuit may be computed. This current is directly proportional to the voltage on the secondary of the coil. A ratio may then be taken to yield the current through the primary winding (the current through the lamp) in terms of the observed secondary voltage.

I (lamp) = V[at T-r] x (Current Scale Factor) / (amp gain)

Radiant Energy:

To calibrate the OMA a lamp is used whose spectral power distribution (SPD) is known. First the OMA is wavelength calibrated with a mercury discharge lamp Four of the six distinct lines of the mercury spectrum are located with the OMA's cursor and the corresponding wavelength is entered. The OMA then fits a third degree polynomial through the points to determine the wavelength as a function of channel number for all 1024 channels.

After this is done, the data on the standard lamp is adjusted so that it represents the total power emitted by the lamp over all space, rather than just the power emitted in the solid angle used by GTE's Tests and Measurements Section to make the SPD of the lamp. The data is given in units of watt/nm on S cm^2 at a distance of R cm away from the lamp. A spline fit was used on the OMA to generate the continuous spectrum from 30 of these data points.

The radiant energy from the lamp was assumed to be constant in all directions, so the total power from the lamp over all space was obtained by multiplying this spectrum by the area of a sphere centered at the lamp with radius = R, and dividing that result by the area (s) of the detector used to take the SPD.

$STDPWR = PWRT\&M \times 4 \times \pi \times R^2/s$

STDPWR = Total power put out by standard lamp over all space units = watts/nm

PWRT&M = Power distribution from T&M at solid angle $S/(R^2)$ units = watts/nm on area S at R cm

S = Area of T&M's detector used to SPD the lamp (cm^2)
R = Distance of detector from lamp during the SPD (cm)

Next the standard lamp is placed in the oven apparatus where the test lamp will go and its spectrum is acquired by the OMA. From this information a correction curve can be generated (CC, units = (watt-seconds)/(nm-counts) by taking the ratio of the actual energy distribution of the standard lamp (STDPWRxdT) to the observed energy of the standard lamp in arbitrary units (OBSEN). When an unknown spectrum is taken (units = counts), it can be converted to physical units ((watt-sec)/nm) by multiplying by the correction curve. The procedure is summarized below, in terms used throughout the computation.

$CC = STDPWR \times dT/OBSEN$

CC = The correction curve, units = (Watt-sec)/(nm-count)

dT = The acquisition time for the standard lamp's spectrum

units = seconds

OBSEN = The acquired standard lamp's spectrum

units = counts

Now the OMA is calibrated, and to scale an unknown spectrum:

$E(W) = USPECT \times CC$

E(W) = The energy per unit wavelength at each wavelength, units = (watt-seconds)/nm.

SSPECT = The spectrum scaled to the correct physical units, energy as a function of wavelength, units = (watt-sec)/nm.

USPECT = The unscaled spectrum, units = counts.

Once the scaled spectrum has been computed, the radiated energy into each peak will be the area under that peak. This area my be evaluated with the SUMAOI program on the MicroVAX.

ENERGY = Sum over a peak (E(w)dW)

ENERGY = The total radiant energy from the lamp into the band of wavelengths summed, units = watts-sec
dW = Difference in wavelength between adjacent channels; dW is dependent on the magnitude of the wavelength, units = nm.

B.3.3 Experimental Procedure

Once the voltage, current and radiant energy measurement sections of the apparatus have been calibrated, data acquisition can start. The heart of the system is the SPECT6 program on the LeCroy which controls the firing of the lamp, records v(t) and i(t), and starts the OMA scanning when acquiring a spectrum.

Taking data for a run (one set of conditions - pulsewidth, temperature, current, salt in the lamp, etc.), consists of two parts. First the average i(t) and v(t) for the lamp are recorded for a number of pulses with the transient recorders and from this information the energy into the lamp (watt-seconds) per pulse is computed by the program. Then the OMA records the average spectrum for a series of pulses, compensates it for the background radiation, and scales the spectrum to the correct physical units.

The data acquisition must take place in two sections because the digitizing of the current and voltage is a relatively slow process; the lamp is fired about every 5 seconds. The OMA cannot record these pulses because the signal to noise ratio is too low; the lamp must be fired from 1 to 10 Hz to get an adequate S/N ratio on the OMA.

Electrical Input Energy:

The procedure used to acquire the average electrical energy into lamp may be summarized as follows:

- Turn all the equipment on and allow the oven to warm up and stabilize at the desired temperature. Set the desired pulsewidth on the pulse generator.

- Initiate the discharge once to be sure everything is working.

- Set the sampling parameters, for the transient recorders (start time, sample interval, etc.), in the SPECT6 program so that one pulse fills about 70% of a graph of i(t) or v(t). Set the parameters, sample one pulse, and plot it. Repeat these steps until one pulse fills about 70% of one plot.

- Set the number of pulses to average, usually 10 to 20.

- Once these parameters are set for one pulsewidth they can be saved to disk. They may be reloaded at a later date when the same pulsewidth is being used again.

- Acquire and record average i(t), v(t), and energy into the lamp. Repeat a couple of times to get an estimate of any non-systematic error in the energy into the lamp.

Radiant Energy Output:

The procedure to acquire the averaged radiant energy out of the lamp may be summarized as follows:

- Set up the reference mercury discharge lamp in front of the detector aperture.
- Acquire a spectrum.
- Execute OMA firmware program for energy calibration.

- Turn the pulsing equipment on and allow the oven to warm up (for metal vapor lamp only) and stabilize at the desired temperature. Set the desired pulsewidth on the pulse generator.

- Initiate the discharge once to be sure everything is working.

- Set up the number of times the lamp is to be fired in the SPECT6 program on the LeCroy.

- Make sure that the total time the lamp is pulsed is less than the accumulated time that the OMA is scanning, or some of the pulses may not be recorded.

- Put the OMA in the EXT START mode. Have the SPECT6 program on the LeCroy start the run.

- After the spectrum has been acquired, the OMA will compensate the spectrum for the background, divide by the number of pulses, and multiply by the correction curve to get the proper units (watt-sec/nm).

- Save this spectrum on the OMA diskette in an empty location. Later it will be transferred to the MicroVAX.

- The energy in various bands of wavelengths may be computed on the MicroVAX and/or a plot file may be created.

B.3.4 Experimental Results

Thallium Iodide

Thallium Iodide was studied more extensively than the other lamp fills because it had a relatively high vapor pressure at moderate temperatures (1 torr at 450 degrees Celsius.). This makes it possible to work with higher number densities than could be achieved with the other salts. A typical TI spectrum for 1 pulse is shown in Figure B-7. The lamp gives off a "traffic light" green light when pulsed, and at long pulsewidths it is fairly bright. Total efficiencies for the lamp were on the order of a few tenths of a percent.

We evaluated thallium iodide capsules with 100-150 torr of Argon in the fill, and with no Argon in the fill. No noticeable difference in the efficiency (within the experimental error) was detectable between the two fills.

Typical voltage, current, and power waveforms for a 100 micro-second pulse are shown in Figure B-8. The leading spike ionized the gas and the following low voltage (60 volts), high current (2 amps) part of the waveform provides the electrons for collisional excitation of the Thallium atoms. The green (535 nm) light is emitted when the electrons decay from the 2S to the 2P level.

Two sets of data were taken on the Thallium lamp, one at 350 degrees Cel. and one at 450 degrees Cel. The radiant power output by each pulse decreases as the pulse length is increased. The power radiated into the dominant thalium lines is plotted in Figure B-9. Note that as the pulse width decreases the lowest excited state, which radiates at 352 nm, increases dramatically. This result is typical for many short pulse discharges. The emission line of interest at 535 nm also increases with decreasing pulse width, even though at longer pulse widths the visible line exceeds the UV.

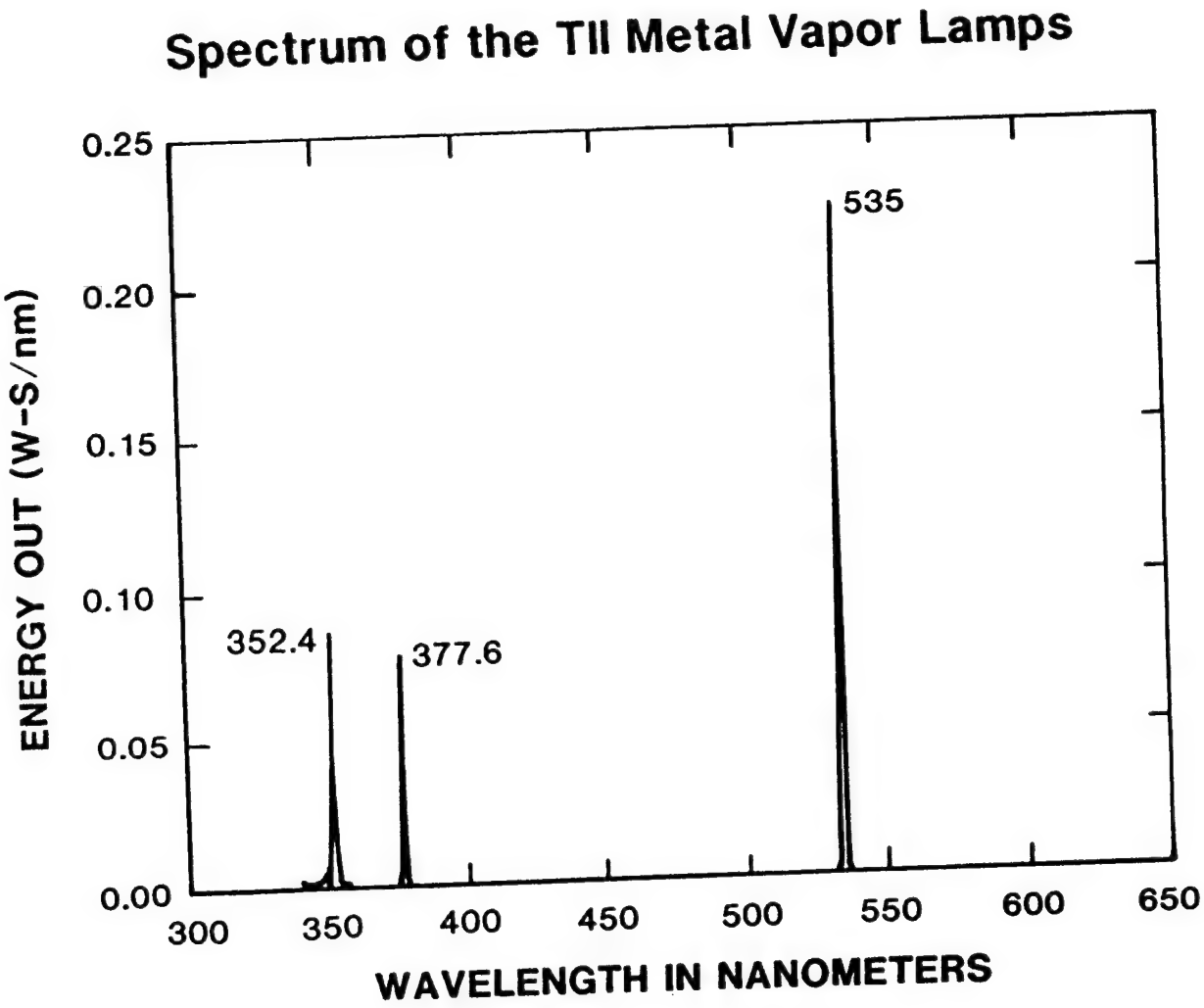
Spectrum of the TlI Metal Vapor Lamps
ENERGY OUT (W-S/nm)
0.25
0.20
0.15
0.10
0.05
0.00
352.4
377.6
535
300
350
400
450
500
550
600
650
WAVELENGTH IN NANOMETERS

Figure B-7

Typical Voltage, Current and Emission Waveforms for the TII Metal Vapor Lamp

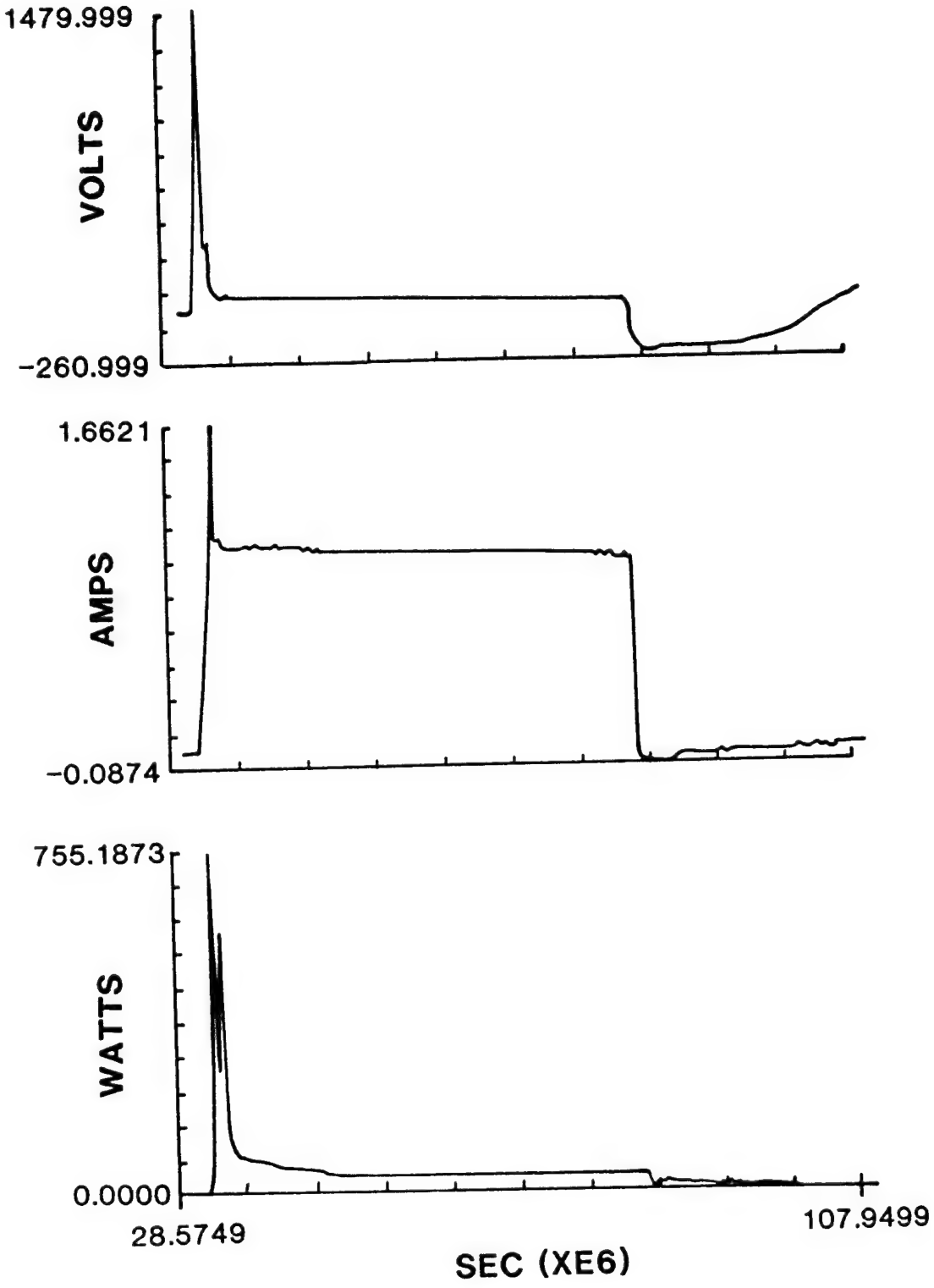

Figure B-8

Radiated Power Versus Pulse Width for the TII Metal Vapor Lamp

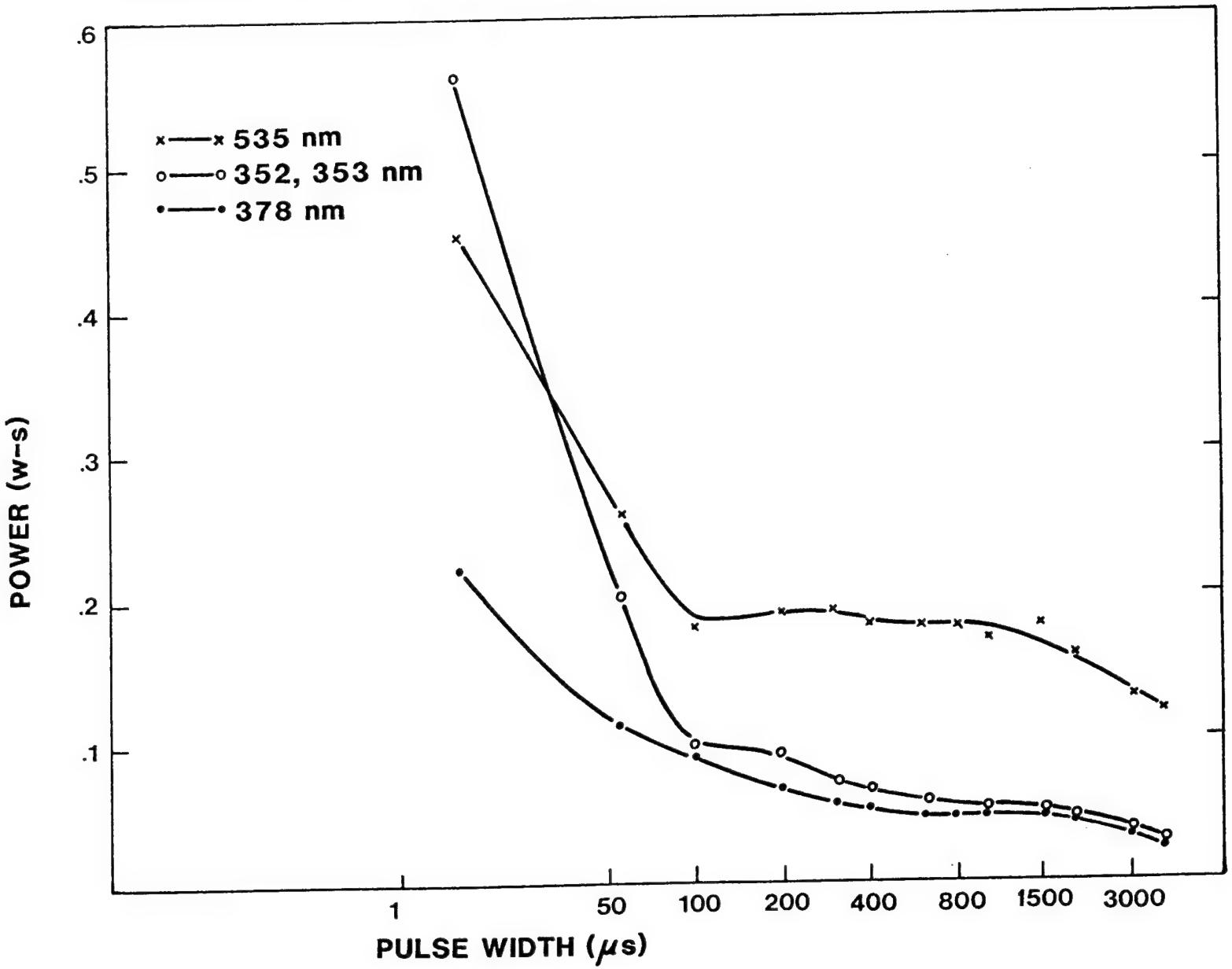

Figure B-9

Lithium Iodide:

Lamps with a lithium fill give off a scarlet red color of light. The spectrum for the LiI lamp is shown in Figure B-10. Even though the vapor pressure of LiI is low compared to that of TlI the LiI lamp was more efficient (on the order of 2%) than TI at the same temperature.

The LiI lamp seemed to be very sensitive to the amount of time that the lamp was allowed to sit idle before pulsing it. When the lamp was pulsed at 1 Hz. for 2 minutes before taking data the efficiency was only 0.1%. If it was allowed to idle for 3 to 5 minutes before taking data the efficiency was 2% and the lamp appeared to be much brighter.

With pulse widths of 20 microseconds the arc was sharply defined, narrow, and crooked with a bluish -reddish color to it. At 100 microseconds the arc is still bent but begins to get fatter and appears more reddish; at 500 to 1000 microseconds red is very prominent and the arc fills about half the tube. As the temperature increased the arc had sharper edges and was better defined for a given pulsewidth. It also became more difficult to establish the arc as the temperature increased. This is due to the increased number density at higher temperatures.

Cadmium Iodide

For pulse widths above approximately 1ms the discharge was diffuse and had a light blue color to it. The efficiency was below 0.5% for the pressure region up to several torr.

Sodium Iodide:

Sodium Iodide is fairly similar to Lithium Iodide since both are alkali metals. Peak efficiencies of 1-2% were achieved for vapor pressures of a few tenths of a torr. Pressures of several torr were not easy to achieve due to the low vapor pressure of Sodium Iodide.

B.4 Cold Salts Lamps

A cold salts lamp consists of a metal-iodide salt at the bottom of an arc tube covering the tungsten electrode. The electrons flow from the top electrode and sputter the salt into the vapor phase where it ionizes and forms the plasma; which radiates at the characteristic wavelengths of the metal. A diagram of the lamp is shown in Figure B-11.

The following fills were tested in the cold salts lamps:

Thallium Iodide	- green
Sodium Iodide	- yellow
Lithium Bromide	- red
Lithium Iodide	- red

Spectrum of the LiI Metal Vapor Lamp

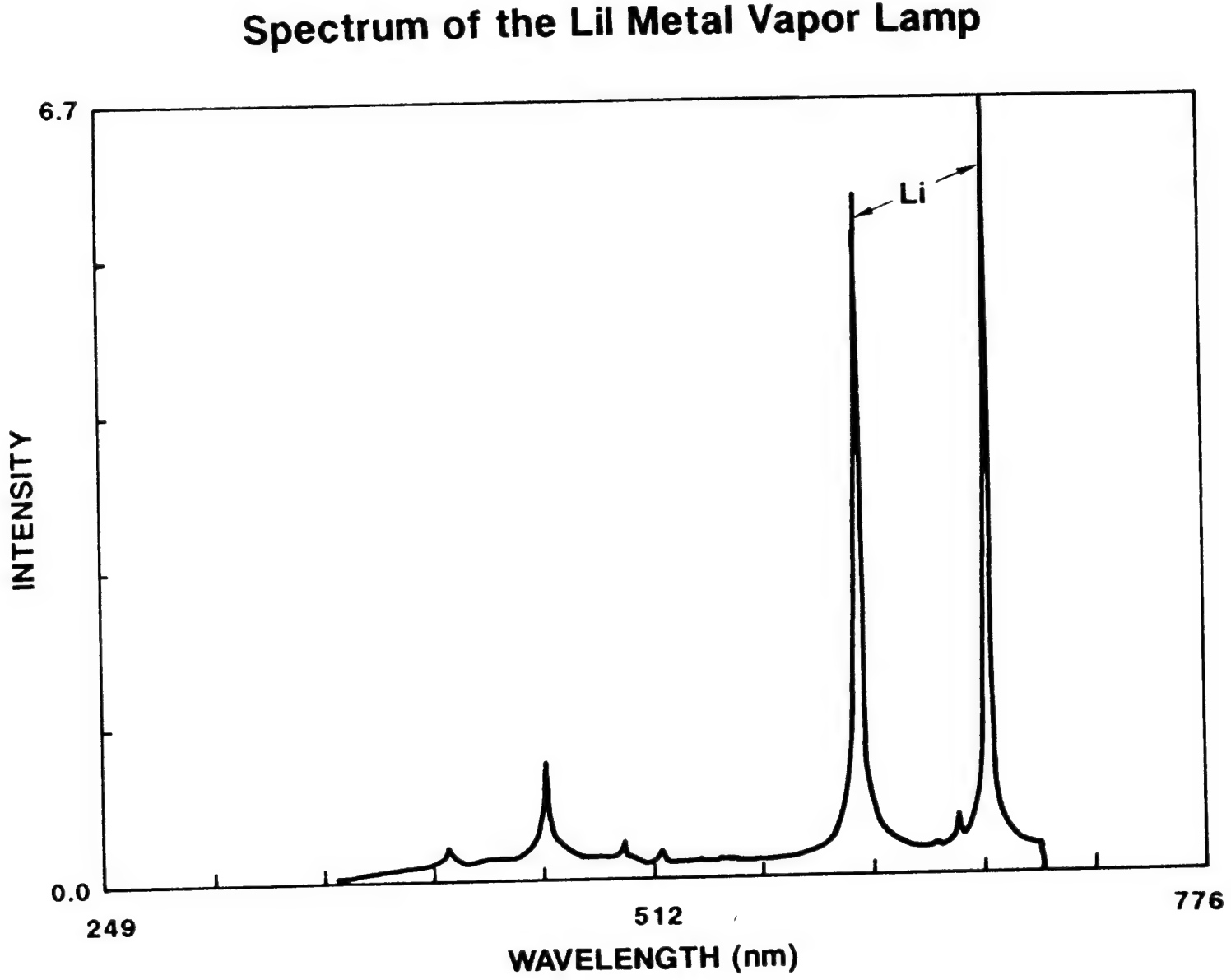

Figure B-10

COLD SALTS LAMP

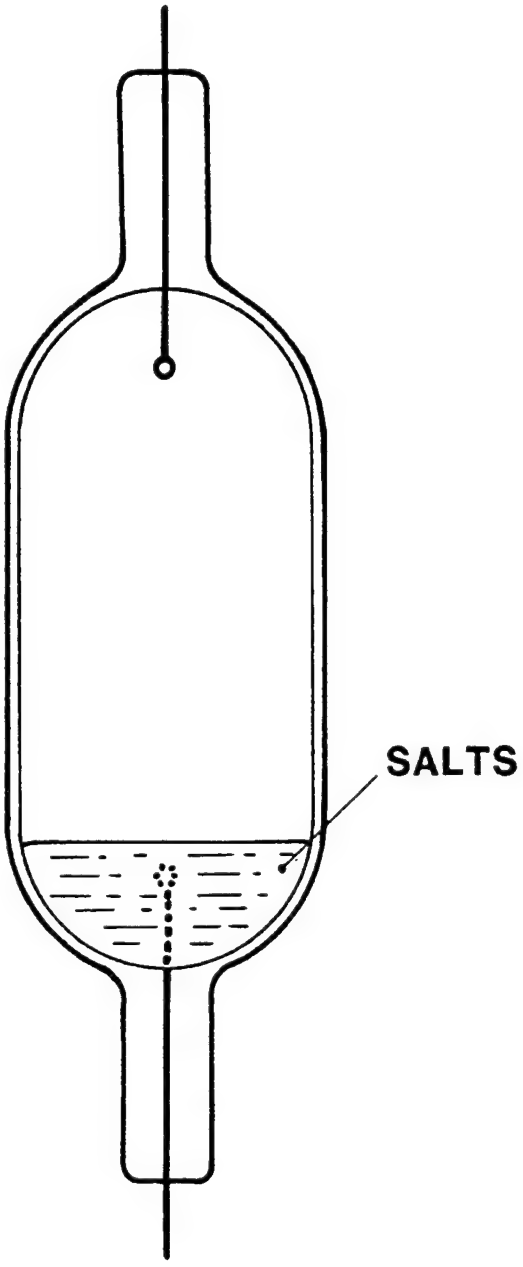

Figure B-11

B.4.1 Experimental Results

The emission spectrum observed for both the Sodium and Lithium Iodides is dominated by their respective resonant lines. These lines are referred to as resonant since they terminate on the ground state configuration for the atom.

The operational tests on the cold salts were limited to single pulse modes. The source was oriented with the salt covered electrode down, even though tests with the opposite orientation indicated no difference. A discharge was then established by initiating a cathode glow using a high voltage (1-2KV), short duration pulse followed by a 50-600VDC potential across the gap.

The development of the discharge can be characterized with the aid of Figure B-12. A high speed video recorder was used to observe the lamp with a resolution of 1ms. In the figure the frames are shown in 1msec increments. The first frame shows the critical cathode glow.

As the discharge develops, the region above the salts changes from a light bluish hue (probably due to the ambient argon present) to the characteristic yellow from Sodium. As a result, the efficiency for production of color improves as the pulse width is increased. A typical light output plot is shown in Figure B-13.

The test setup was essentially identical to that described in B.3 with the exception of the auxillary oven. We took efficiency measurements for single pulse conditions with durations ranging from 1 to 500 milliseconds and power levels from 10 to 50 watts. The peak efficiencies for both the Lithium and Sodium Iodides were approximately 4% in the color bands. The averaged efficiencies over the pulse width ranged from 2% to 4%. The best mode of operation appeared to be at 500ms.

During the early stages of evaluation it was noted that the cold salt lamps were somewhat unstable and difficult to pulse reliably. To evaluate the statistical values for repeatability and reliability several cold salt lamps were pulsed approximately 10 thousand times while recording the light output and input electrical power. A histogram of the integrated light output produced the typical statistical "bell" curves as shown in Figure B-14. Typically the spread in the light output from pulse to pulse was 10% full width at half maximum (FWHM).

Unfortunately, the cold salt lamps misfired approximately 25% of the time. The problem appears to be related to formation of a constricted arc terminating into the set and sputtered "holes" in the cold salt surface. Since the tests were performed at 30-40 watts the probability of arc formation is higher than at lower power levels. At the time of this report no experimentation has been done at lower power levels.

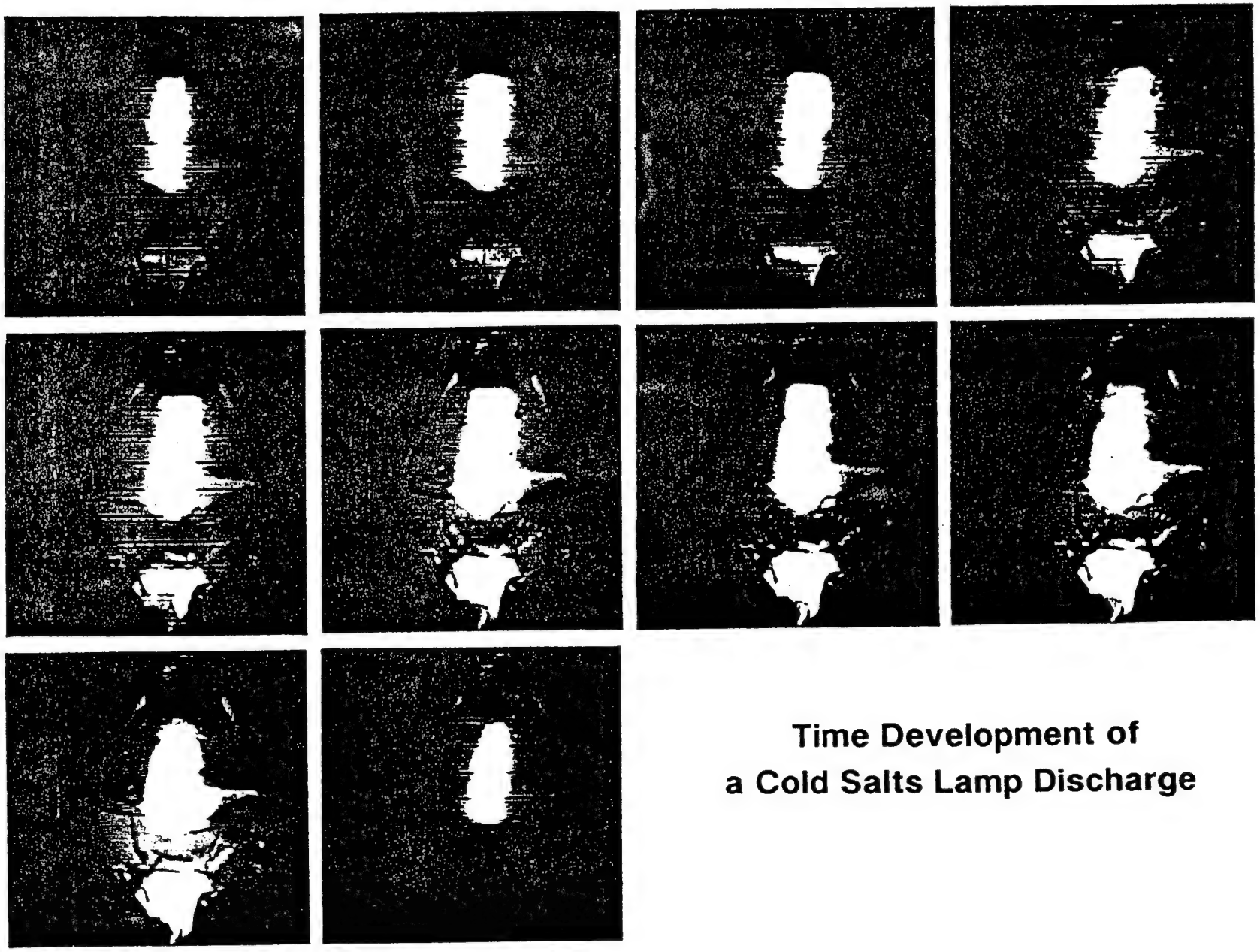

Time Development of a Cold Salts Lamp Discharge

Figure B-12

Light Output Versus Time of a Cold Salts Lamp

LITHIUM BROMIDE COLD

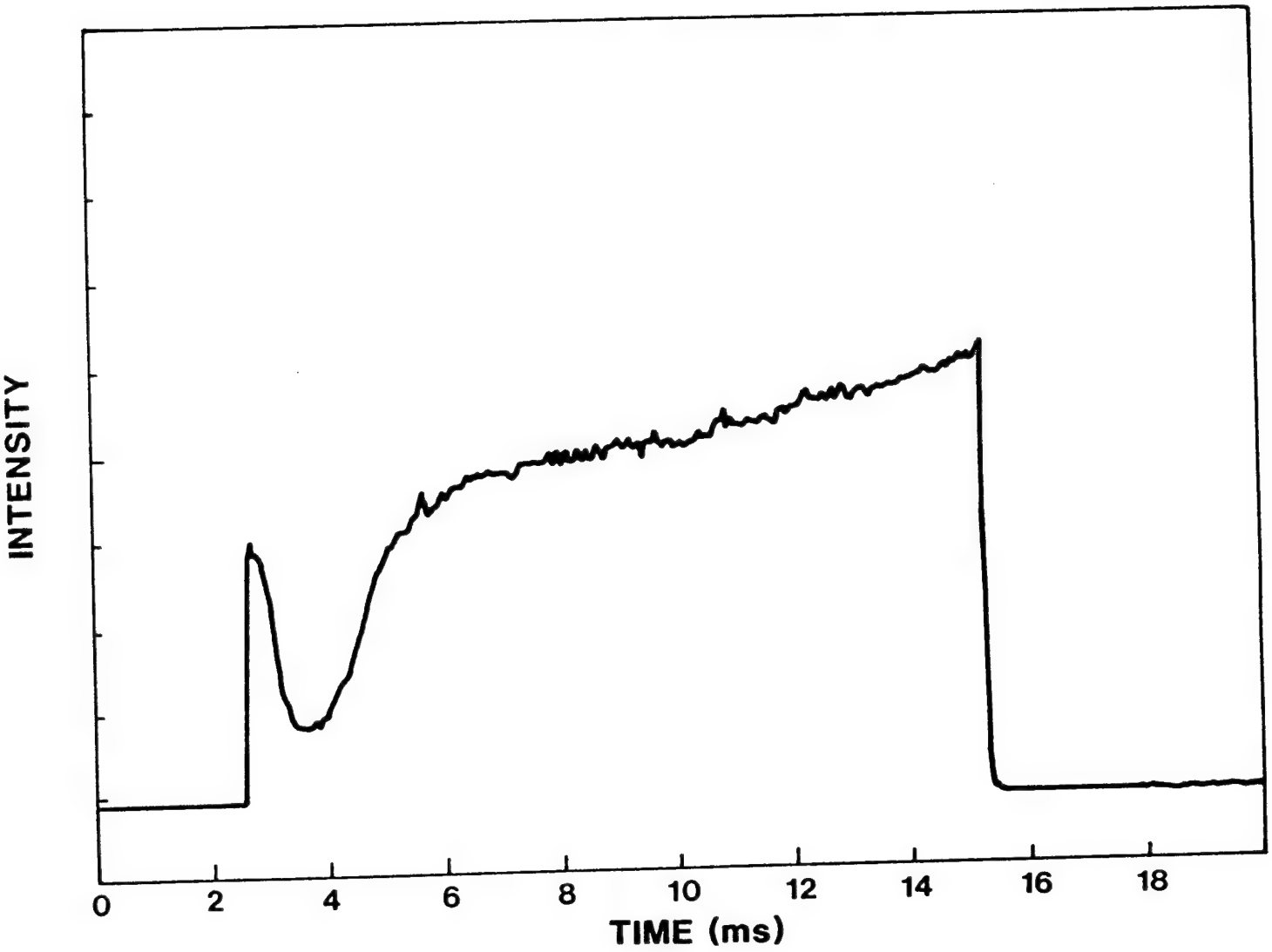

Figure B-13

Repeatability of Light Output of the NaI Cold Salts Lamp

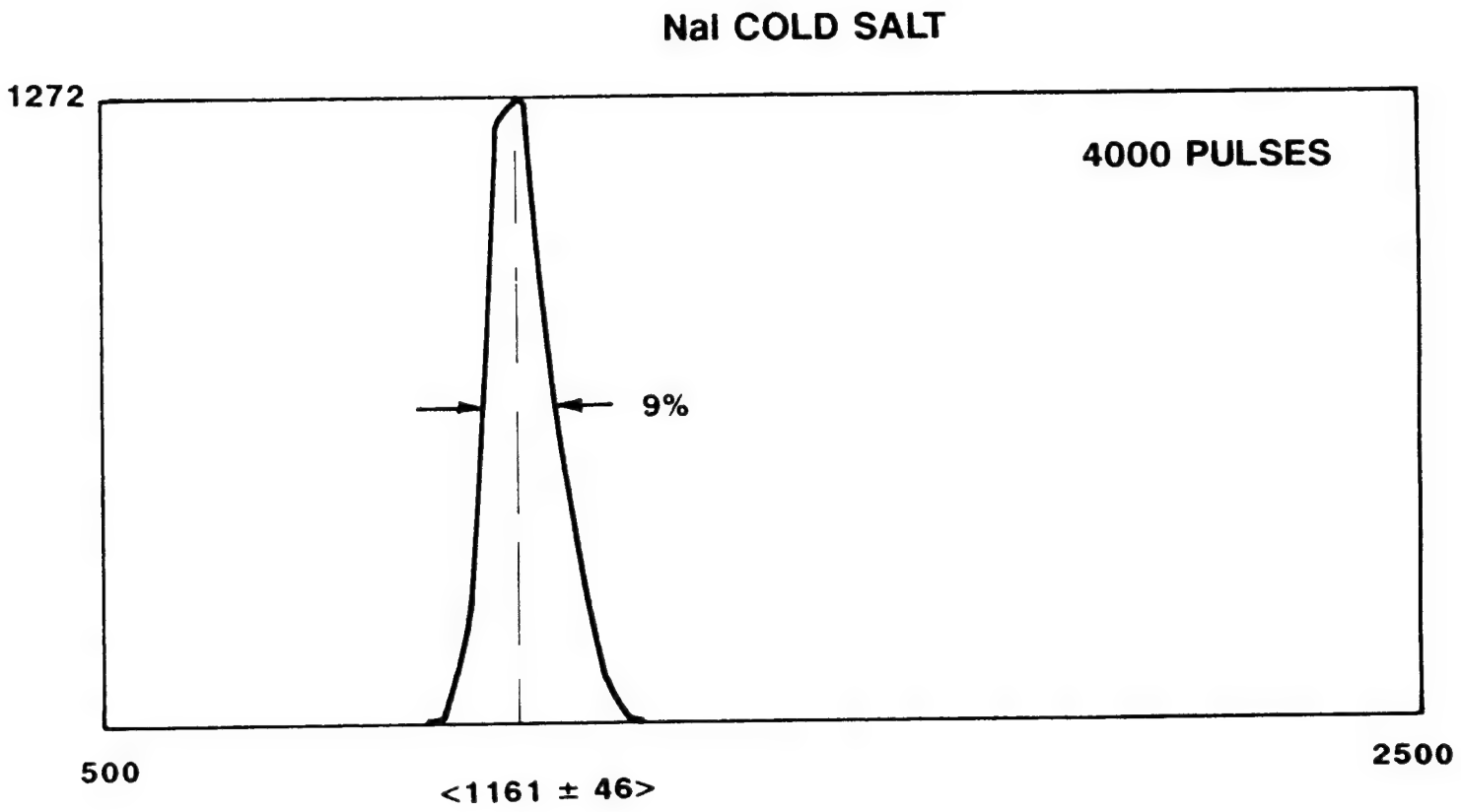

Figure B-14

Lithium Bromide was also considered since it has a slightly higher melting point that Lithium Iodide and would be less likely to erode as readily. The pulse tests however indicated no improvement in either reliability of repeatability.

B.5 Heated Salts Lamps

The metal vapor lamps have the advantage that the radiating metals are already in the gas phase; so that it is easier to form the arc. However, they require a bulky heater apparatus around the lamp. The cold salts lamps are simpler, but they are harder to pulse and the salts at the bottom of the lamp have a tendency to erode over time due to sputtering. In order to combine the advantages of both types of lamp without the disadvantages, lamps were made containing halide salts and a heater filament inside the capsule, imbedded in the salts. The filament would heat and melt the salts; increasing their vapor pressure and forming a liquid pool that would "heal" after each pulse. A schematic drawing of the source is shown in Figure B-15.

Lamps containing thallium-iodide (green) and sodium iodide (yellow) were made. When the salts were heated to their melting point, the lamps pulsed strongly in the color characteristic of the metal. Unfortunately, in order to get adequate heating, the filament had to be run at near incandescent temperatures; which caused very short life when imbedded in the metal halide salt.

While we believe that this is a promising technology, we also feel that it would require too much effort to develop it within the time constraints of the current contract.

B.6 Amalgam Lamps

In amalgam lamps, a metal that emits at the desired color is dissolved in mercury. In general, the solutions are saturated--that is, more metal than can go into solution is present in the mercury.The spectrum is then taken with the OMA to see if the characteristic emission from the additive appears along with the mercury lines.

Amalgams were tried of: NaHg
ZnHg
TlHg.

When the lamps are pulsed, the metal tends to come out of solution and coat-out onto the walls of the capsule. To try to correct that, several NaHg lamps were made with excess mercury (i.e.; a subsaturated solution). These lamps ran much longer before the sodium coated-out, but the lamp still ran for only a few dozen pulses.

HEATED SALTS LAMP

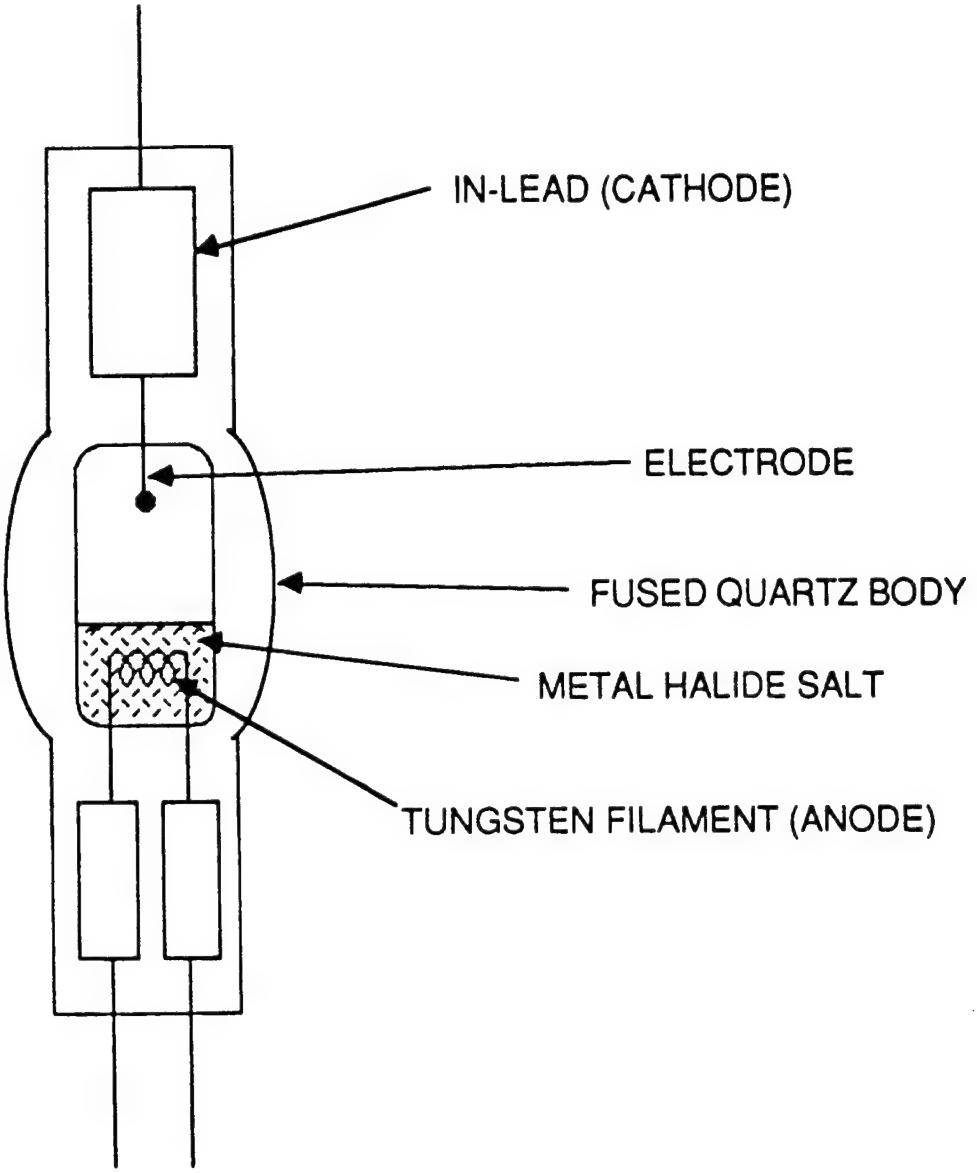

Figure B-15

B.7 Experimental Procedure for Evaluating the Liquid Electrode Lamp

B.7.1 Pulsed Operation in the Test Box

The experimental setup is outlined in Figure B-16. The central controller of the system is an IBM PC/XT. This unit governs the setup, timing, and data transfer to and from the peripheral processing units. All data acquisition and permanent storage is controlled by the PC. The peripheral processing units, namely a LeCroy 8901 GPIB Interface and a PARC model 1461 Detector Interface communicate with the PC via the IEEE-488 General Purpose Interface Bus (GPIB). The interface between the PC and the GPIB is established by a GPIB-PC interface card manufactured by National Instruments.

The constant current power supply delivers a square wave pulse or pulse train, with a 2 kilo-volt ionizing spike on the leading edge to achieve ignition.

Voltage waveforms are sensed by a high voltage probe which terminates into a variable differential amplifier. These amplifiers provide limited high and low frequency band limiting to filter-out the noise inherent in a discharge. The output of the amplifier passes the voltage information to a LeCroy 8837f transient recorder where it is digitized and stored for subsequent retrieval.

Current waveforms are derived by measuring the voltage across a 1 ohm low inductance resistor which is in series with the source under evaluation. This signal is amplified in similar fashion to the voltage waveform, and likewise the current information is digitized and stored on a LeCroy 8837f transient recorder.

Total flux output is determined with the aid of a photomultiplier tube (PMT). Line-of-sight measurements are made through a filter for the wavelength band of interest. The PMT output current, which is now a function of wavelength and transmitted flux is converted to a voltage waveform by terminating into a PARC variable differential pre-amplifier. This information is digitized and recorded by the LeCroy 8837f transient recorder.

For the determination of chromaticity properties, spectral data is acquired via a PARC OMA III system. This system uses a model 1228 spectrograph to disperse the luminous radiation into a spectrum where it is then mapped onto an array of photosensitive diodes which constitute the model 1420 detector. The model 1461 detector interface handles retrieval of information from the detector through a model 1463 detector controller. The controller converts the output of the detector into a digital signal for storage and processing. This spectral data is stored in RAM in the detector interface.

Test Set-Up for the Liquid Electrode Lamp

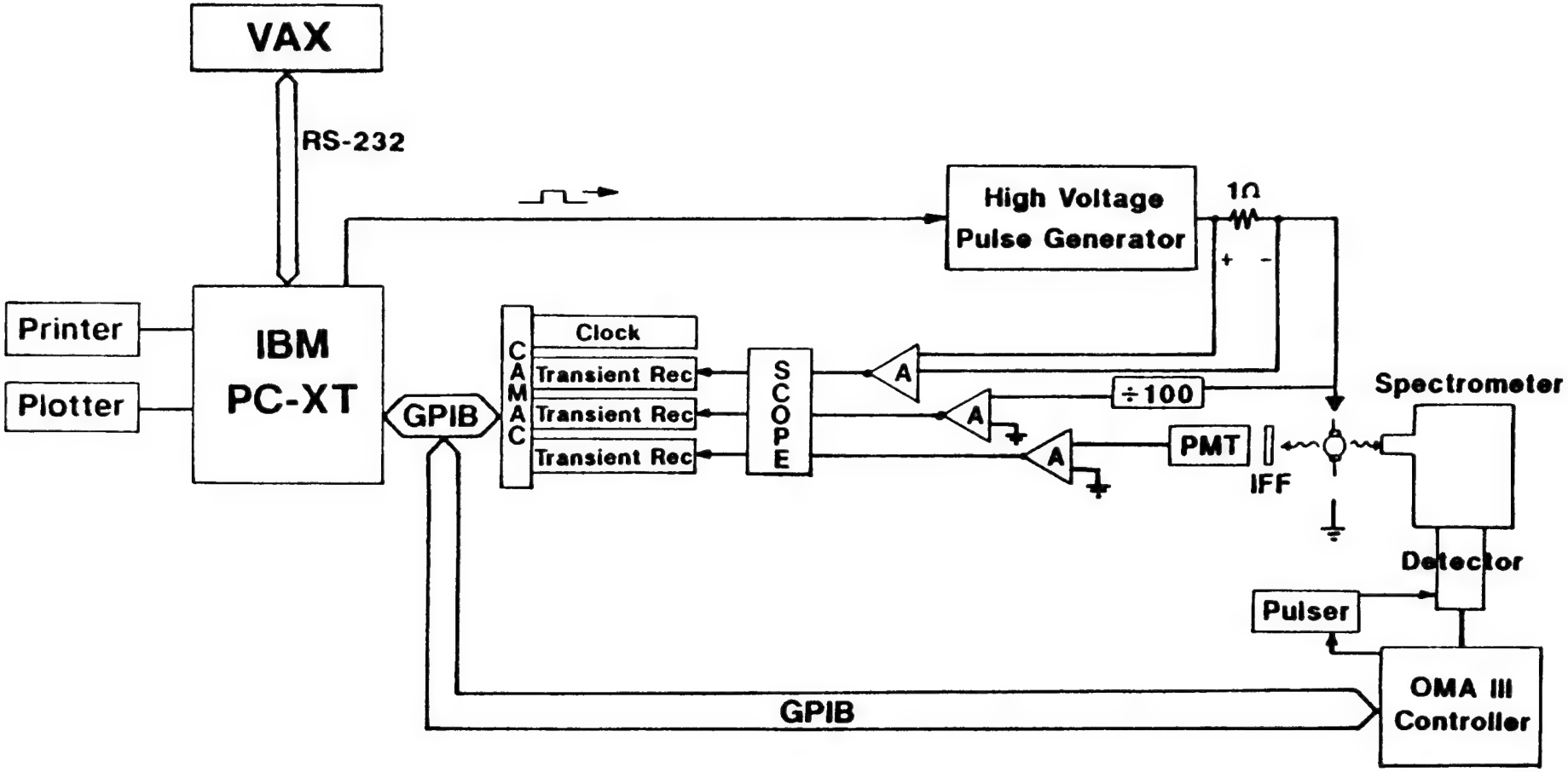

Figure B-16

Explicit communication between the CPU and the GPIB is handled through loadable device drivers supplied by National Instruments with the GPIB-PC interface card. These drivers perform such high level functions as writing to and reading from devices, providing all of the necessary bus management operations automatically.

Since all LeCroy modules operate under the CAMAC standard (IEEE standard 583), an intermediate piece of equipment is required to handle the interface between the CAMAC system and the GPIB controller. The LeCroy model 8901A performs this function. All CAMAC commands are sent to the 8901A by way of the device drivers mentioned above.

Generally, in performing the experiments, one parameter is varied while holding all other factors constant.

A software generated pulse (or pulses) from the computer is then sent to all of the equipment simultaneously. The high voltage pulse generator delivers a pulse(s) and the rest of the devices begin acquiring data when they detect the leading edge of the first pulse.

All of the peripheral devices have a specified amount of volatile memory in which the data is stored when it is acquired. Reading the data, in fact, is the transfer of information from the peripherals to the computer. In order to maximize the efficiency of the program, we choose to perform any filtering or reduction deemed reasonable at this stage, before storing the data to non-volatile memory (i.e.; to disk).

Once the raw data is stored, it is necessary to convert it to a form that is useful.

The voltage information is converted to volts by first taking into account the resolution of the transient recorder, and then scaling by attenuation losses and calibration factors. An integration over the pulsewidth is performed and an average value is determined.

The electrical current information is converted to amperes in similar fashion as the voltage, recognizing the one-to-one relationship of current to voltage due to the use of a one ohm resistor.

The lamp is pulsed over a range of input wattages to generate a curve of output line-of-sight emission versus input power. The Coast Guard's incandescent lamps can then be plotted onto the curve to compare with the efficiency of the liquid electrode lamps at the same power.

B.7.2 Test Procedure for Evaluating Phosphors

A set of 3" x 1" microscope slides were coated with varying thicknesses of red, green and yellow phosphors. The slides were then mounted onto the front of a black box which was placed over a 2" mercury light pen run at 17ma with the phosphor on the side of the slide facing the light pen. The ultraviolet light from the pen then stimulated the phosphors. The light pen had a stabilization time of approximately 15 minutes and came to the same maximum output emission each time it was turned on. Each of the Coast Guard's colored beacon filters was placed over the slide box/light pen system for each slide (each phosphor). The emission was then measured with a Hamamatsu R2066 photomultiplier tube (PMT) with a 3/4" diameter photopic filter in front of it. The maximum value of the emission (the light pen operates at 60Hz) was then read off of an oscilloscope and normalized to take the spectral response of the PMT and the transmission of the neutral density filters used into account using the following formula:

$$I = \left(\begin{array}{c}\text{intensity of}\\ \text{calibration}\\ \text{lamp}\end{array}\right) \times \frac{\text{test mV}}{\left(\text{calibration}\right)} \times \frac{\left(\begin{array}{c}\text{calibration}\\ \text{gain}\end{array}\right)}{\left(\begin{array}{c}\text{test}\\ \text{gain}\end{array}\right)} \times \frac{\left(\begin{array}{c}\text{calibration filter}\\ \text{\% transmission}\end{array}\right)}{\left(\begin{array}{c}\text{test filter}\\ \text{\% transmission}\end{array}\right)}$$

The calibration was performed using a 35W tungsten-halogen lamp with the same colored and photopic filters as were used for the test measurements. The emission of the mercury penlight was then measured in each color band using a frosted glass slide without any phosphor. This was then subtracted from the measured emission of the phosphors. As a cross-check the RMS intensity was also measured using a Beckman 3030 digital multimeter. The phosphors tested are listed in Table 1. Their coating weights on the slides are shown in Table 2.

Spectral power distributions of the slides with the Hg penlight were then taken using the Jerrell-Ash 0.3m monochromator. The set-up for this is shown in Figure B-17. These were then run through our colorimetery programs; which calculated the total emission, normalized to lumens, and the chromaticity coordinates (x and y). These results are tabulated in Table 3.

Test Set-Up for Evaluating the Phosphor Slides

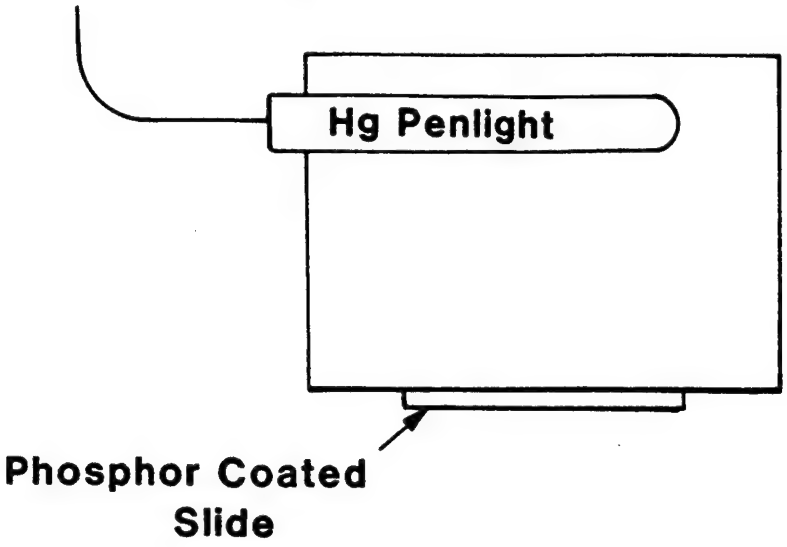

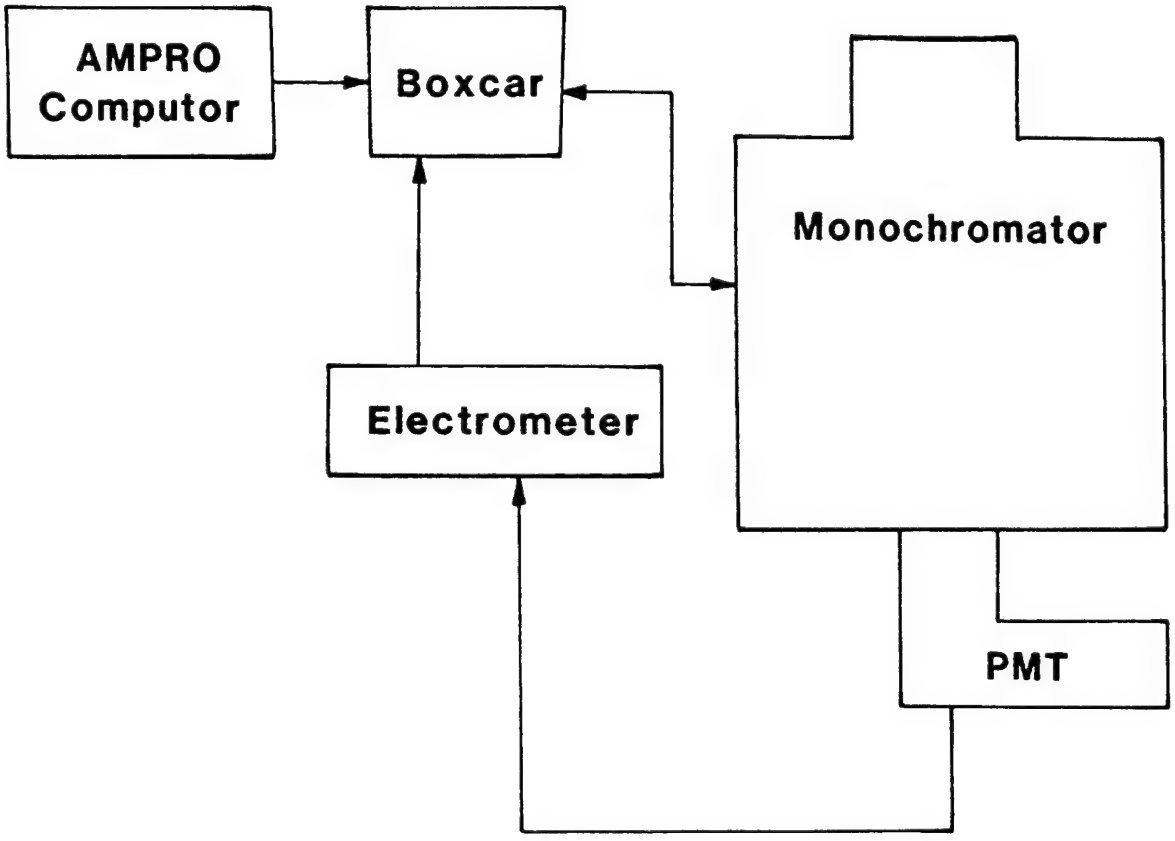

Figure B-17

Table B1. Phosphor Data.

Phosphor Code	Chemical Composition	Nominal Color
2285	Willemite	Green
2293	$MgAl_{11}O_{19}$:CeTb	Green
2340	Y_2O_3:Eu	Red
2364	Germanate	Red
2370	YVO_4:Dy	Yellow
2390	YVO_4:Eu	Red
2511	YAG:Ce	Yellow
4340	$Ca_5F(PO_4)_3$:Sb:Mn	Yellow
4381	$CA_5F(PO_4)_3$:Sb:Mn	Yellow
Dayglo Paint		Red

Table B2. Phosphor Slide Data.

Slide ID#	Phosphor Code	Nominal Color	Coating Weight (mg/cm-2)
1	2511	Yellow	10.09
2	2511	Yellow	9.56
2.5	2511	Yellow	24.53
3	2340	Red	5.72
4	2340	Red	5.72
4.5	2340	Red	8.15
5.5	2390	Red	17.91
6	2390	Red	8.82
7	2285	Green	5.21
7.5	2285	Green	11.77
8	22.85	Green	8.75
9	2364	Red	8.86
10	2364	Red	3.66
11	2293	Green	24.78
12	2293	Green	4.91
13	2370	Yellow	21.58
14	2370	Yellow	8.92
15	2511 + 2340	Yellow + Red	16.52
16	2511 + 2390	Yellow + Red	25.03
17	Dayglo Paint	Red	3.67
17.3	2340 + Dayglo	Red	5.89 + 3.67
17.45	2340 + Dayglo	Red	12.79 + 3.67
17.55	2390 + Dayglo	Red	17.91 + 3.67
17.6	2390 + Dayglo	Red	8.82 + 3.67
17.9	2364 + Dayglo	Red	8.86 + 3.67
17.10	23.64 + Dayglo	Red	3.66 + 3.67
17.15	2511 + 2340 + Dayglo	Yellow + Red	16.52 + 3.67
17.16	2511 + 2340 + Dayglo	Yellow + Red	25.03 + 3.67
17.23	2340 + 2364 + Dayglo	Red	6.20 + 3.67
17.24	2340 + 2390 + Dayglo	Red	7.37 + 3.67
17.25	2364 + 2390 + Dayglo	Red	8.61 + 3.67
18	Dayglo Paint	Red	10.81
18.3	2340 + Dayglo	Red	5.89 + 10.81
18.45	2340 + Dayglo	Red	12.79 + 10.81
18.55	2390 + Dayglo	Red	17.91 + 10.81
18.6	2390 + Dayglo	Red	8.82 + 10.81
18.9	2364 + Dayglo	Red	8.86 + 10.81
18.10	2364 + Dayglo	Red	3.66 + 10.81
18.15	2511 + 2340 + Dayglo	Yellow + Red	16.52 + 10.81
18.16	2511 + 2340 + Dayglo	Yellow + Red	25.03 + 10.81
19	4381	Yellow	7.16
20	4381	Yellow	16.77
21	2340 + 2390	Red	9.65
22	2340 + 2390	Red	8.13
23	2340 + 2364	Red	6.20
24	2340 + 2390	Red	7.37
25	2364 + 2390	Red	8.61
26	4340	Yellow	6.21
27	4340	Yellow	6.34

NOTE: In order to get higher intensities and better color, several phospors were tried in combination. This is indicated on the table by the use of the "+" sign. In the coating weight column, the number before the "+" sign is the weight of the phosphors and the number after it is the weight of the dayglo paint.

TABLE B3 Summary of Emission and Chromaticity Data for the Phosphor Slides.

SLIDE ID	PHOSPHOR	COLOR	COATING WEIGHT	FILTER	EMISSION	X	Y
5.5	2390	RED	17.91	GREEN	93	.2796	.5513
4.5	2340	RED	12.79	GREEN	109	.2780	.5533
16	2511 + 2390	YELLOW + RED	25.03	GREEN	115	.2965	.6459
6	2390	RED	8.82	GREEN	132	.2832	.5274
3	2340	RED	5.89	GREEN	134	.2890	.5184
25	2364 + 2390	RED	8.61	GREEN	138	.2718	.5514
24	2340 + 2390	RED	7.37	GREEN	141	.2796	.5290
2.5	2511	YELLOW	25.43	GREEN	142	.2846	.6720
15	2511 + 2340	YELLOW + RED	16.52	GREEN	144	.3020	.6457
23	2340 + 2364	RED	6.20	GREEN	145	.2783	.5362
9	2364	RED	8.86	GREEN	162	.2719	.5703
10	2364	RED	3.66	GREEN	189	.2763	.5311
Hg PEN	NONE			GREEN	205	.3122	.4920
1	2511	YELLOW	10.09	GREEN	218	.2712	.6731
13	2370	YELLOW	21.58	GREEN	244	.3062	.4827
7.5	2285	GREEN	11.77	GREEN	301	.2224	.6767
14	2370	YELLOW	8.92	GREEN	321	.3188	.4541
20	4381	YELLOW	16.77	GREEN	323	.2959	.5517
11	2293	GREEN	24.78	GREEN	325	.2573	.5744
12	2293	GREEN	4.91	GREEN	409	.2562	.5565
26	4340	YELLOW	6.21	GREEN	443	.3261	.5815
19	4381	YELLOW	7.16	GREEN	536	.2951	.5544
8	2285	GREEN	8.75	GREEN	642	.2201	.6640
4.5 + 18	2340 + DAYGLO	RED	12.79 + 10.81	NONE	183	.6447	.3338
25 + 17	2364 + 2390 + DAYGLO	RED	8.61 + 3.67	NONE	208	.6520	.3096
4.5 + 17	2340 + DAYGLO	RED	12.79 + 3.67	NONE	232	.6286	.3269
3 + 18	2340 + DAYGLO	RED	5.89 + 10.81	NONE	260	.6555	.3241
5.5 + 18	2390 + DAYGLO	RED	17.91 + 10.81	NONE	269	.6028	.3619
24 + 17	2340 + 2390 + DAYGLO	RED	7.37 + 3.67	NONE	271	.6398	.3218
16 + 18	2511 + 2390 + DAYGLO	YELLOW + RED	25.03 + 10.81	NONE	273	.5975	.3705
23 + 17	2340 + 2364 + DAYGLO	RED	6.20 + 3.67	NONE	281	.6521	.3082
9 + 18	2364 + DAYGLO	RED	8.86 + 10.81	NONE	286	.6118	.3567
15 + 18	2511 + 2340 + DAYGLO	YELLOW + RED	16.52 + 10.81	NONE	311	.6144	.3586
9 + 17	2364 + DAYGLO	RED	8.86 + 3.67	NONE	311	.6073	.3510
3 + 17	2340 + DAYGLO	RED	5.89 + 3.67	NONE	325	.6325	.3200
6 + 18	2390 + DAYGLO	RED	8.82 + 10.81	NONE	338	.6248	.3451
10 + 18	2364 + DAYGLO	RED	3.66 + 10.81	NONE	341	.6260	.3420

5.5 + 17	2390 + DAYGLO	RED	17.91 + 3.67	NONE	346	.6080	.3438
15 + 17	2511 + 2340 + DAYGLO	YELLOW + RED	15.52 + 3.67	NONE	348	.6083	.3632
Hg PEN	NONE			NONE	348	.3851	.4599
16 + 17	2511 + 2390 + DAYGLO	YELLOW + RED	25.03 + 3.67	NONE	357	.6128	.3582
6 + 17	2390 + DAYGLO	RED	8.82 + 3.67	NONE	375	.6093	.3395
10 + 17	2364 + DAYGLO	RED	3.66 + 3.67	NONE	403	.6231	.3283
5.5	2390	RED	17.91	NONE	432	.5240	.4079
2.5	2511	YELLOW	25.43	NONE	458	.4459	.5307
25	2364 + 2390	RED	8.61	NONE	464	.5397	.3876
16	2511 + 2390	YELLOW + RED	25.03	NONE	477	.5305	.4486
4.5	2340	RED	12.79	NONE	486	.5249	.4096
6	2390	RED	8.82	NONE	550	.5378	.4004
15	2511 + 2340	YELLOW + RED	16.52	NONE	569	.5292	.4510
24	2340 + 2390	RED	7.37	NONE	572	.5293	.3977
23	2340 + 2364	RED	6.20	NONE	574	.5550	.3825
10	2354	RED	3.66	NONE	593	.5046	.4156
1	2511	YELLOW	10.09	NONE	638	.4293	.5347
3	2340	RED	5.89	NONE	660	.5401	.4044
13	2370	YELLOW	21.58	NONE	679	.4142	.4589
7.5	2285	GREEN	11.77	NONE	702	.3266	.5900
9	2364	RED	8.86	NONE	720	.4911	.4359
14	2370	YELLOW	8.92	NONE	754	.4044	.4503
11	2293	GREEN	24.78	NONE	809	.4123	.4876
12	2293	GREEN	4.91	NONE	934	.4189	.4799
20	4381	YELLOW	16.77	NONE	973	.4464	.4839
26	4340	YELLOW	6.21	NONE	1118	.4734	.4822
8	2285	GREEN	8.75	NONE	1277	.3618	.5562
19	4381	YELLOW	7.16	NONE	1481	.4500	.4740
Hg PEN	NONE			RED	29	.6184	.3770
11	2293	GREEN	24.78	RED	92	.6278	.3535
4.5 + 18	2340 + DAYGLO	RED	12.79 + 10.81	RED	109	.6825	.3166
16 + 18	2511 + 2390 + DAYGLO	YELLOW + RED	25.03 + 10.81	RED	111	.6585	.3274
9 + 18	2364 + DAYGLO	RED	8.86 + 10.81	RED	114	.6760	.3110
20	4381	YELLOW	16.77	RED	119	.6443	.3543
9 + 17	2364 + DAYGLO	RED	8.82 + 3.67	RED	119	.6762	.3113
12	2293	GREEN	4.91	RED	119	.6348	.3509
5.5 + 18	2390 + DAYGLO	RED	17.91 + 10.81	RED	120	.6619	.3251
15 + 18	2511 + 2340 + DAYGLO	YELLOW + RED	16.52 + 10.81	RED	135	.6637	.3232
16	2511 + 2390	YELLOW + RED	25.03	RED	139	.6695	.3291
25 + 17	2364 + 2390 + DAYGLO	RED	8.61 + 3.67	RED	143	.6819	.3117
5.5	2390	RED	17.91	RED	151	.6744	.3249
16 + 17	2511 + 2390 + DAYGLO	YELLOW + RED	25.03 + 3.67	RED	157	.6621	.3263
15 + 17	2511 + 2340 + DAYGLO	YELLOW + RED	16.52 + 3.67	RED	159	.6613	.3283
9	2364	RED	8.86	RED	160	.6781	.3125
4.5	2340	RED	12.79	RED	161	.6673	.3320
5.5 + 17	2390 + DAYGLO	RED	17.91 + 3.67	RED	161	.6660	.3238

10 + 18	2364 + DAYGLO	RED	3.66 + 10.81	RED	162	.6859	.3051
26	4340	YELLOW	6.21	RED	165	.6429	.3536
15	2511 + 2340	YELLOW + RED	16.52	RED	167	.6641	.3339
3 + 18	2340 + DAYGLO	RED	5.89 + 10.81	RED	178	.6862	.3132
4.5 + 17	2340 + DAYGLO	RED	12.79 + 3.67	RED	179	.6640	.3272
6 + 18	2390 + DAYGLO	RED	8.82 + 10.81	RED	180	.6724	.3178
25	2364 + 2390	RED	8.61	RED	199	.6840	.3123
24 + 17	2340 +2390 + DAYGLO	RED	7.37 + 3.67	RED	200	.6734	.3218
10	2364	RED	3.66	RED	201	.6860	.3066
10 + 17	2364 + DAYGLO	RED	3.66 + 3.67	RED	203	.6849	.3068
23 + 17	2340 + 2364 + DAYGLO	RED	6.20 + 3.67	RED	204	.6826	.3128
6 + 17	2390 + DAYGLO	RED	8.82 + 3.67	RED	205	.6703	.3221
6	2390	RED	8.82	RED	213	.6713	.3280
3 + 17	2340 + DAYGLO	RED	5.89 + 3.67	RED	220	.6785	.3204
24	2340 + 2390	RED	7.37	RED	234	.6659	.3298
3	2340	RED	5.89	RED	235	.6673	.3320
19	4381	YELLOW	7.16	RED	241	.6436	.3554
23	2340 + 2364	RED	6.20	RED	251	.6790	.3169
16	2511 + 2390	YELLOW + RED	25.03	YELLOW	33	.5859	.4129
HgPEN	NONE			YELLOW	291	.4569	.5390
7.5	2285	GREEN	11.77	YELLOW	292	.4594	.5363
2	2511	YELLOW	25.43	YELLOW	306	.5073	.4896
5.5	2390	RED	17.91	YELLOW	341	.5895	.4089
4.5	2340	RED	12.79	YELLOW	385	.5846	.4136
25	2364 + 2390	RED	8.61	YELLOW	409	.6021	.3941
1	2511	YELLOW	10.09	YELLOW	411	.5012	.4954
15	2511 + 2340	YELLOW + RED	16.52	YELLOW	430	.5756	.4224
6	2390	RED	8.82	YELLOW	459	.5930	.4055
24	2340 + 2390	RED	7.37	YELLOW	469	.5936	.4035
23	2340 + 2364	RED	6.20	YELLOW	494	.6064	.3900
9	2364	RED	8.86	YELLOW	497	.5680	.4258
10	2364	RED	3.66	YELLOW	550	.5809	.4139
3	2340	RED	5.89	YELLOW	564	.5844	.4140
13	2370	YELLOW	21.58	YELLOW	589	.5032	.4906
11	2293	GREEN	24.78	YELLOW	591	.4900	.5020
14	2370	YELLOW	8.92	YELLOW	597	.4915	.5021
8	2285	GREEN	8.75	YELLOW	681	.4698	.5233
20	4381	YELLOW	16.77	YELLOW	721	.5058	.4916
12	2293	GREEN	4.91	YELLOW	724	.4915	.5014
26	4340	YELLOW	6.21	YELLOW	1103	.5199	.4772
19	4381	YELLOW	7.16	YELLOW	1131	.5173	.4800

B.8 Continuous Operation Lamps

B.8.1 45 Watt Metal Halide Lamp

For a previous contract with the Coast Guard (Contract #DTCG23-84-C-20027), we developed a 45 watt metal halide lamp for use in light houses. In this lamp, the radiation is provided by the combined spectra of mercury, sodium and scandium (which are supplied to the lamp as NaScl) which gives a white light. Typically, these lamps can reach efficiacies of over 65lpw.

A computer simulation was run to determine the performance of a typical metal halide lamp through the colored beacon filters. This was done by multiplying the spectrum of the lamp by the transmission curves of the filters and then running the resulting "product spectrum" through our colorimetry programs. The results are tabulated below in Table 1.

Table B4. Performance of a 45 Watt Metal Halide Lamp Through the Colored Beacon Filters

Filter	LPW	Percent Transmission	x	y	Meets Color Requirement?
None	66.6	100.0	0.4108	0.3885	yes
Green	18.8	28.2	0.2260	0.4393	yes
Yellow	44.9	67.5	0.5496	0.4448	no
Red	12.6	19.0	0.6361	0.3492	no

The spectra of the lamp and of the lamp through the filters are shown in Figures B-18 to B-21.

Spectrum of a 45 Watt Metal Halide Lamp

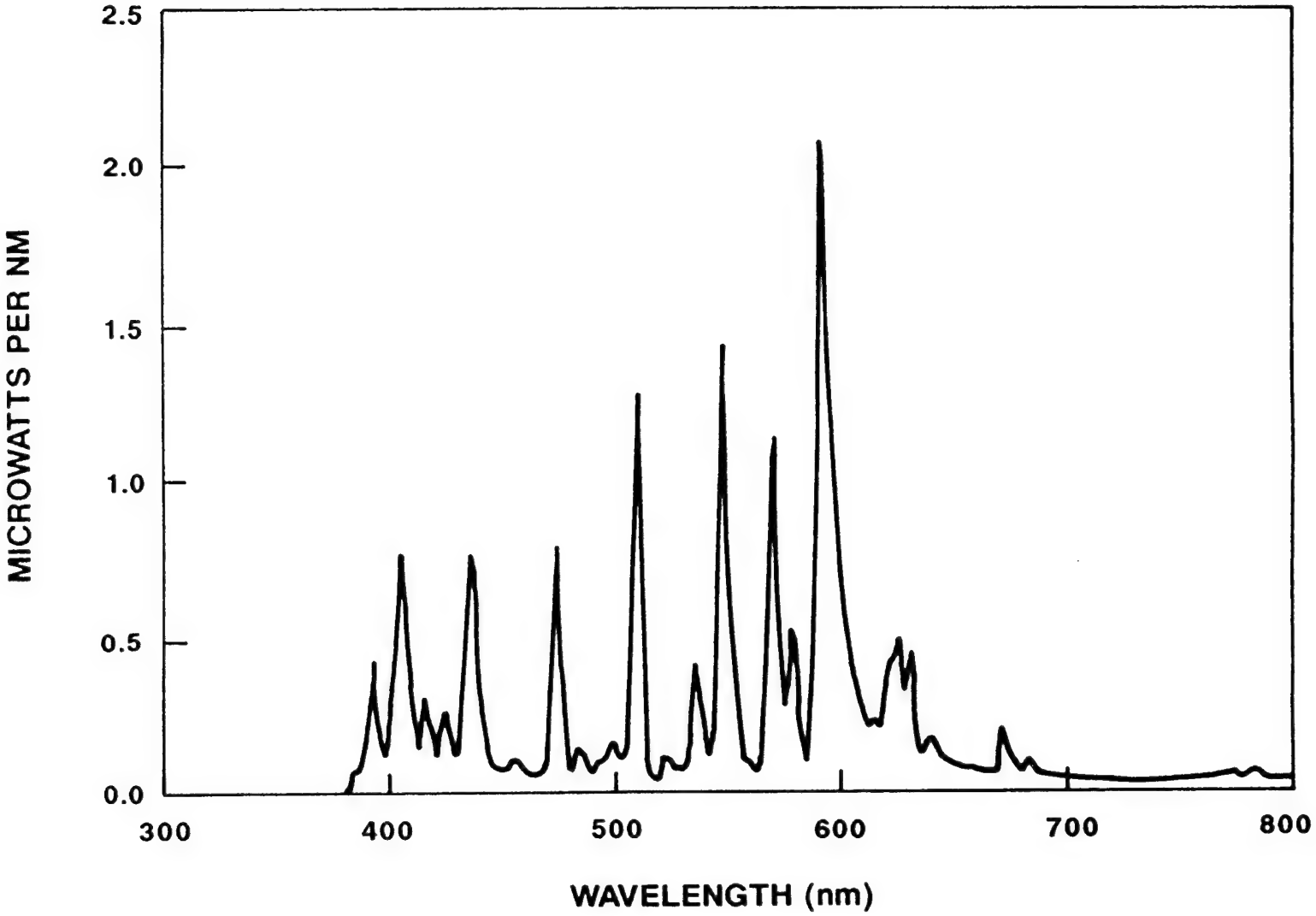

Figure B-18

Spectrum of a 45 Watt Metal Halide Lamp through the Green Beacon Filter

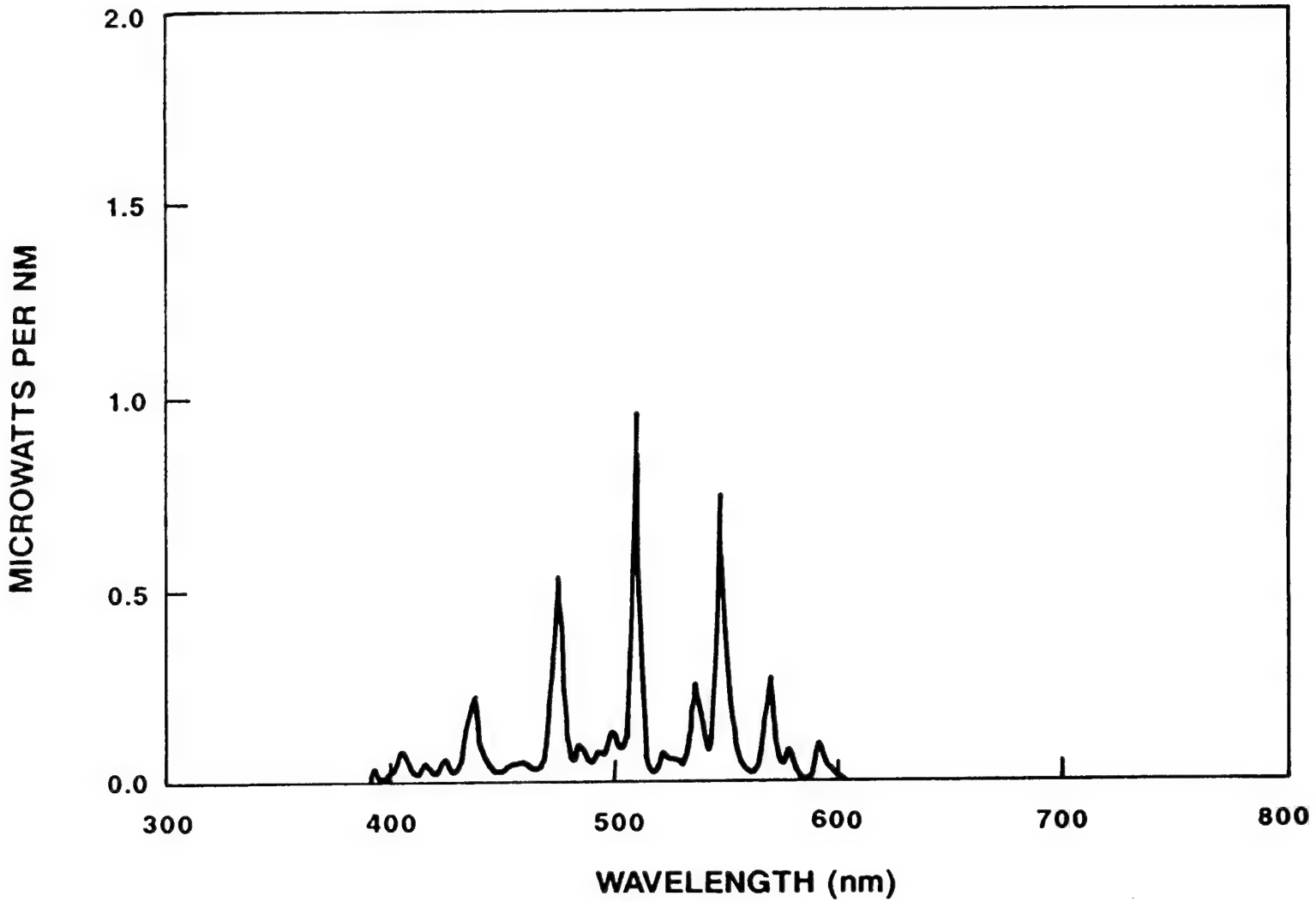

Figure B-19

Spectrum of a 45 Watt Metal Halide Lamp through the Yellow Beacon Filter

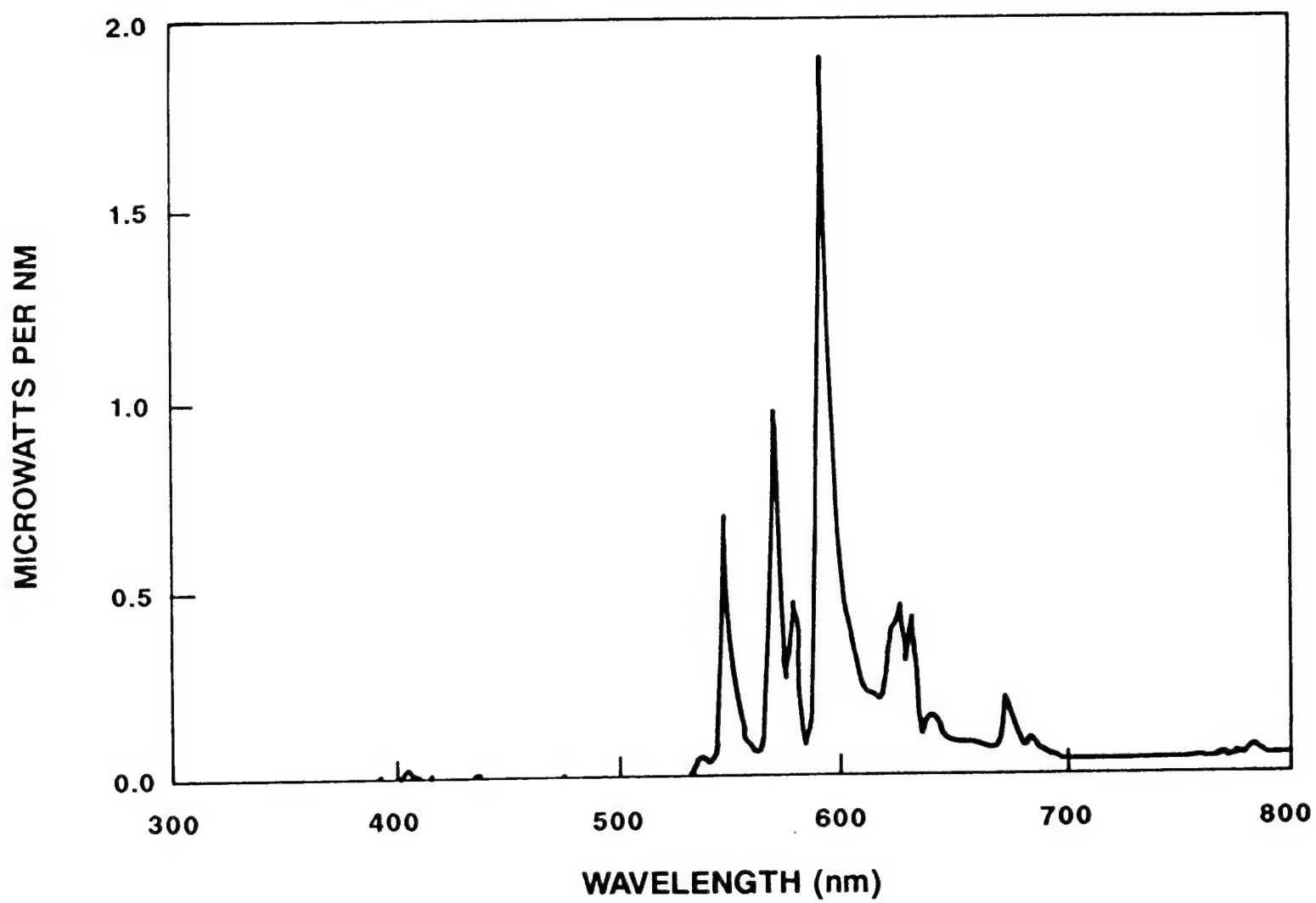

Figure B-20

Spectrum of a 45 Watt Metal Halide Lamp through the Red Beacon Filter

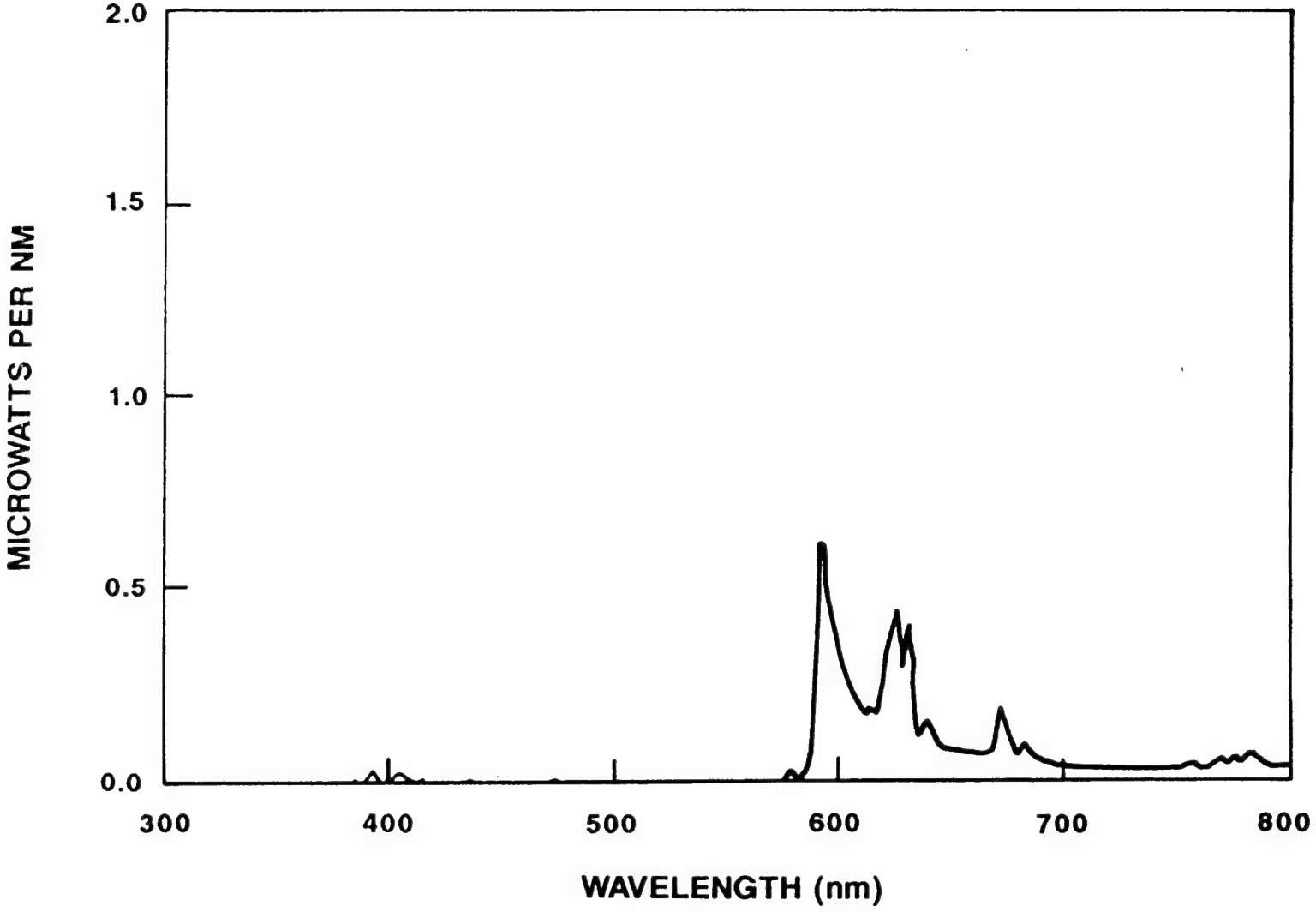

Figure B-21

[BLANK]

APPENDIX B

The *Engineering Design Drawing Package* is included as *Appendix B* to this *Report*. As noted earlier, work performed previous to January 29, 1993 was conducted under the Electrical Products Group of GTE Products Corporation, predecessor organization to OSRAM SYLVANIA Inc.

[BLANK]

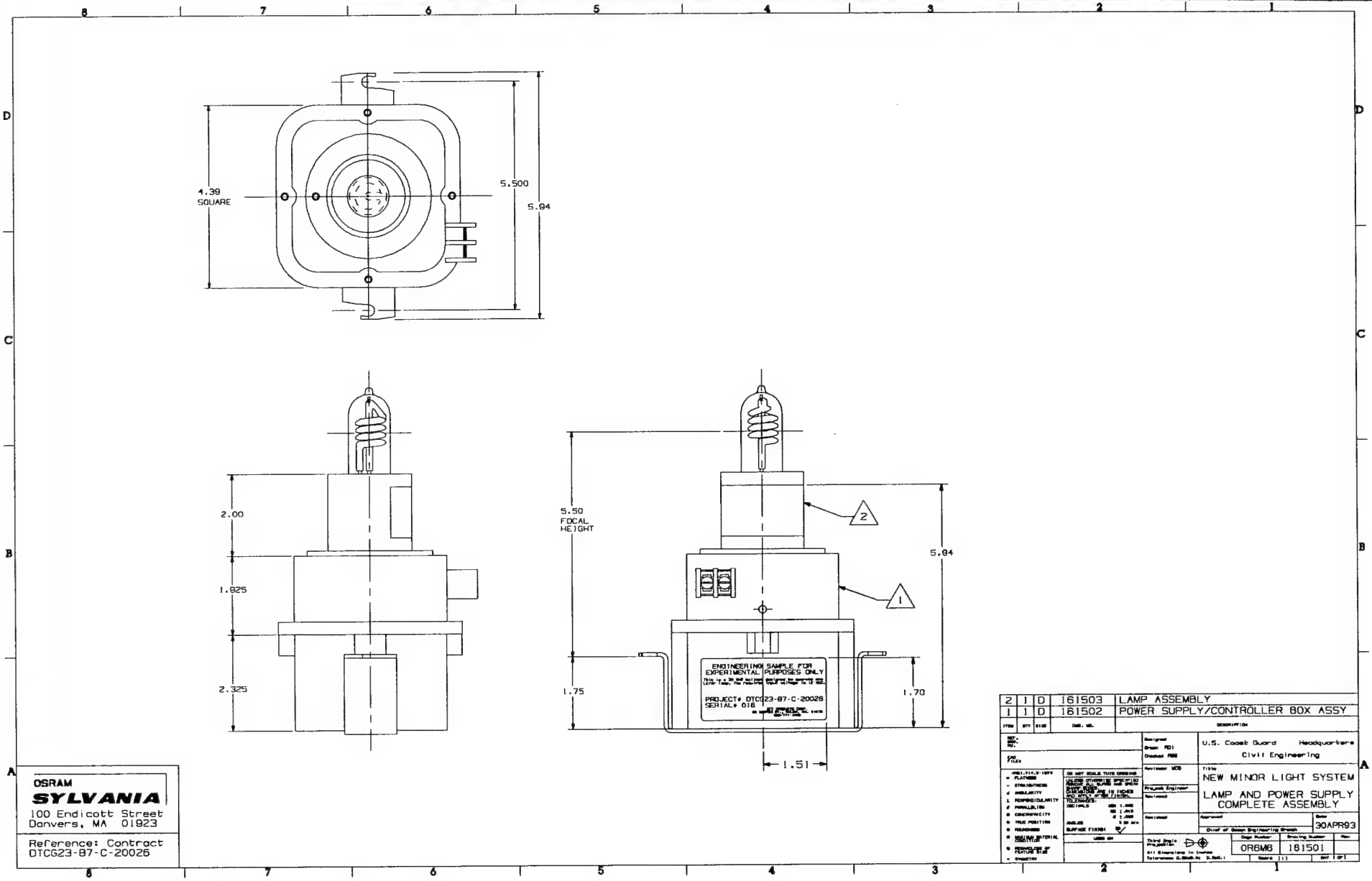
4.39
SQUARE
5.500
5.94
2.00
1.925
2.325
5.50
FOCAL
HEIGHT
5.94
1.75
1.70
1.51
2
1
ENGINEERING SAMPLE FOR
EXPERIMENTAL PURPOSES ONLY
PROJECT# DTCG23-87-C-20026
SERIAL# 018
OSRAM
SYLVANIA
100 Endicott Street
Danvers, MA 01923
Reference: Contract
DTCG23-87-C-20026
2 1 D 161503 LAMP ASSEMBLY
1 1 D 161502 POWER SUPPLY/CONTROLLER BOX ASSY
U.S. Coast Guard Headquarters
Civil Engineering
NEW MINOR LIGHT SYSTEM
LAMP AND POWER SUPPLY
COMPLETE ASSEMBLY
30APR93
0R6M6
181501

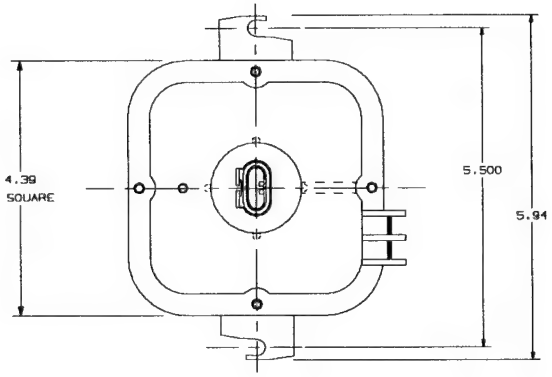

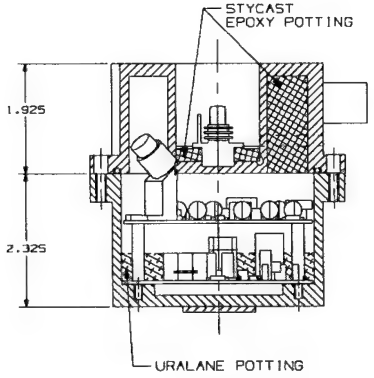

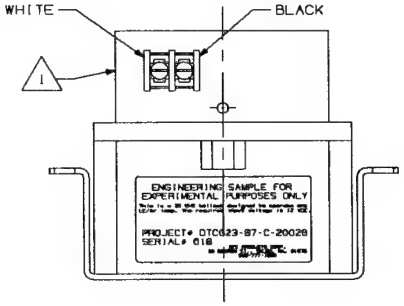

OSRAM
SYLVANIA
100 Endicott Street
Danvers, MA 01923

Reference: Contract
DTCG23-87-C-20026

1	1	D	161504	POWER SUPPLY - EXPLODED

U.S. Coast Guard Headquarters
Civil Engineering

NEW MINOR LIGHT SYSTEM
POWER SUPPLY/CONTROLLER
BOX ASSEMBLY

30APR93

Chief of Ocean Engineering Branch

Dwgs Number	Drawing Number	Rev
OR6M6	161502	

Scale 1:1 | Sht 1 of 1

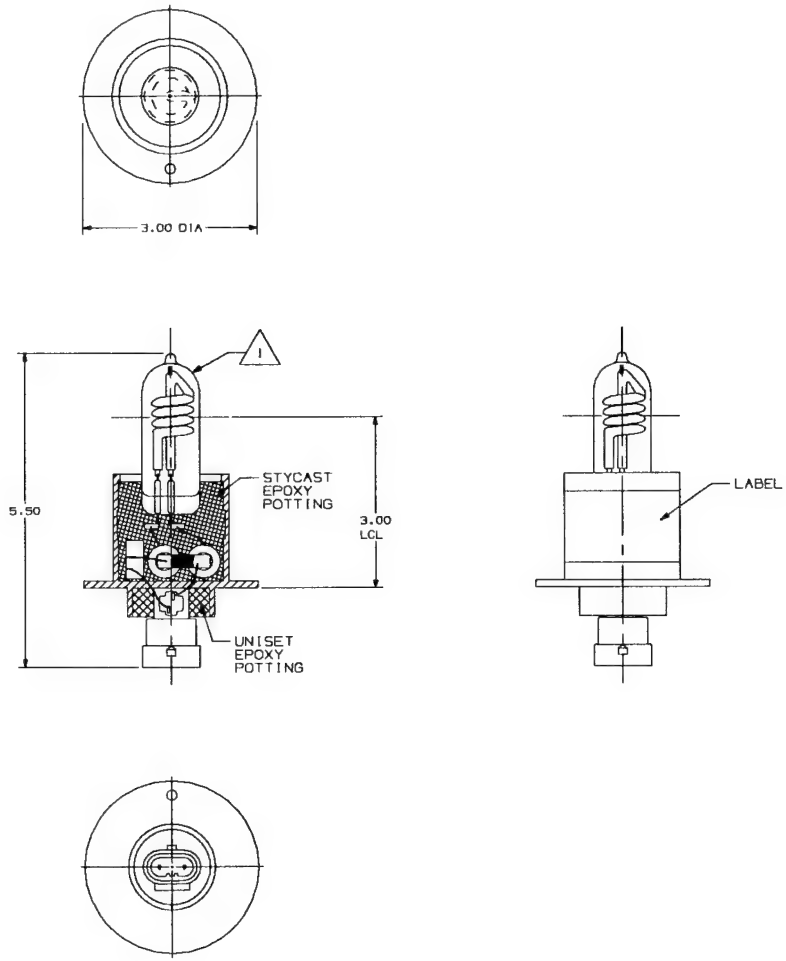

ITEM	QTY	SIZE	DWG. NO.	DESCRIPTION
1	1	0	161505	LAMP ASSEMBLY - EXPLODED

U.S. Coast Guard Headquarters
Civil Engineering

NEW MINOR LIGHT SYSTEM
LAMP ASSEMBLY

Date: 30APR93

Chief of Ocean Engineering Branch

Code Number: 0R6M6 | Drawing Number: 161503

Sheet 1 of 1

OSRAM
SYLVANIA
100 Endicott Street
Danvers, MA 01923

Reference: Contract
DTCG23-87-C-20026

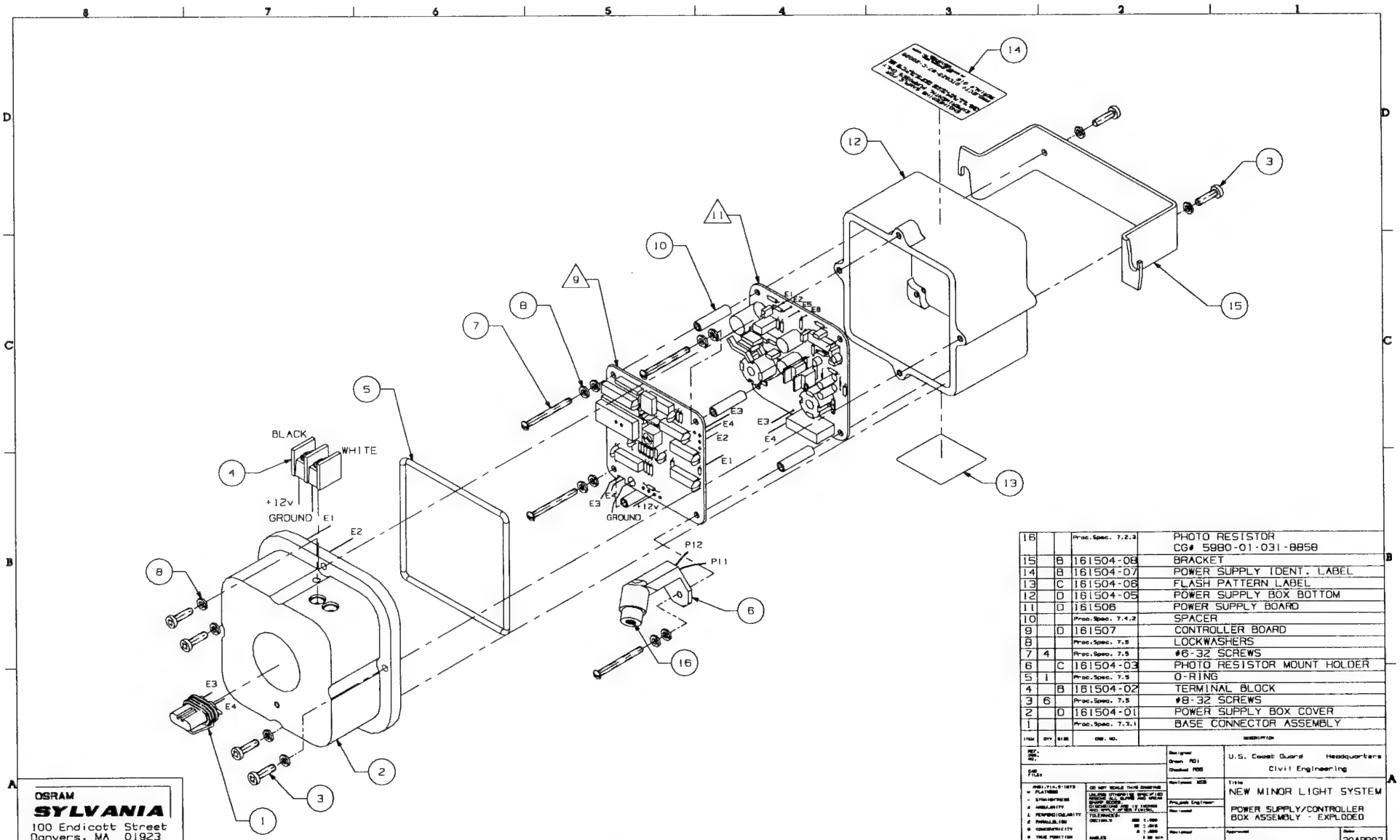

ITEM	QTY	SIZE	DWG. NO.	DESCRIPTION
16			Proc.Spec. 7.2.3	PHOTO RESISTOR CG# 5980-01-031-8858
15		B	161504-08	BRACKET
14		B	161504-07	POWER SUPPLY IDENT. LABEL
13		C	161504-06	FLASH PATTERN LABEL
12		D	161504-05	POWER SUPPLY BOX BOTTOM
11		D	161508	POWER SUPPLY BOARD
10			Proc.Spec. 7.4.2	SPACER
9		D	161507	CONTROLLER BOARD
8			Proc.Spec. 7.5	LOCKWASHERS
7	4		Proc.Spec. 7.5	#6-32 SCREWS
6		C	161504-03	PHOTO RESISTOR MOUNT HOLDER
5	1		Proc.Spec. 7.5	O-RING
4		B	161504-02	TERMINAL BLOCK
3	6		Proc.Spec. 7.5	#8-32 SCREWS
2		D	161504-01	POWER SUPPLY BOX COVER
1			Proc.Spec. 7.3.1	BASE CONNECTOR ASSEMBLY

OSRAM SYLVANIA
100 Endicott Street
Danvers, MA 01923

Reference: Contract
DTCG23-87-C-20026

U.S. Coast Guard Headquarters
Civil Engineering

NEW MINOR LIGHT SYSTEM

POWER SUPPLY/CONTROLLER BOX ASSEMBLY - EXPLODED

30APR93

OR6W6 | 161504

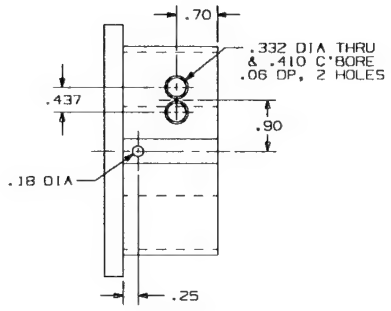

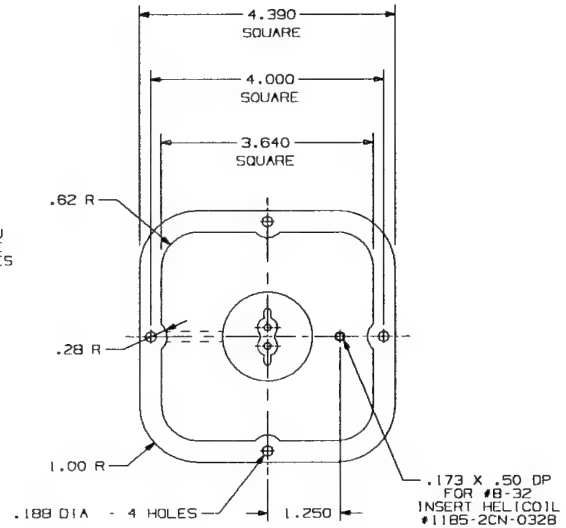

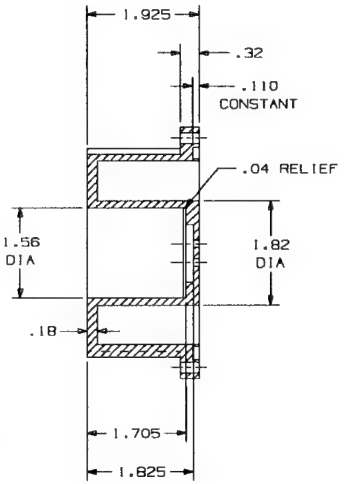

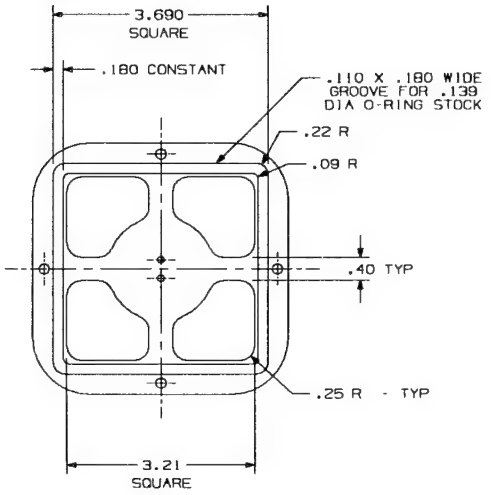

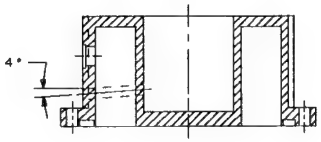

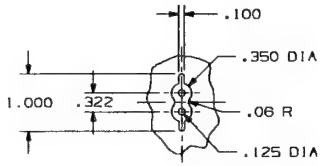

NOTE: MATERIAL
CLEAR ACRYLIC

OSRAM
SYLVANIA
100 Endicott Street
Danvers, MA 01923

Reference: Contract
DTCG23-87-C-20026

U.S. Coast Guard Headquarters
Civil Engineering

NEW MINOR LIGHT SYSTEM
POWER SUPPLY
BOX COVER

30APR93

OR6M6 | 181504-01

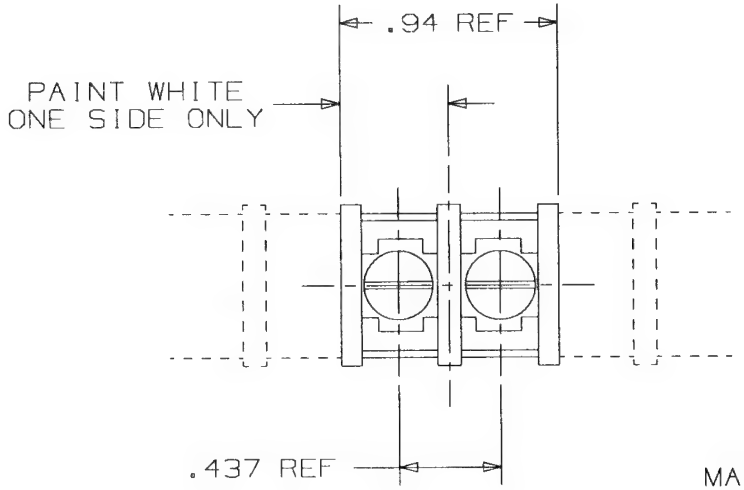

MAKE FROM:

KULKA SINGLE ROW FEED THRU
TERMINAL BLOCK 699-2104 SERIES
OR BEAU-BARRIER TERMINAL #73202-49-C

OSRAM
SYLVANIA
100 Endicott Street
Danvers, MA 01923

Reference: Contract
DTCG23-87-C-20026

REF. DWG. NO.

CAD FILE:

ANSI Y14.5-1973
- FLATNESS
- STRAIGHTNESS
- ANGULARITY
- PERPENDICULARITY
- PARALLELISM
- CONCENTRICITY
- TRUE POSITION
- ROUNDNESS
- MAXIMUM MATERIAL CONDITION
- REGARDLESS OF FEATURE SIZE
- SYMMETRY

DO NOT SCALE THIS DRAWING

UNLESS OTHERWISE SPECIFIED REMOVE ALL BURRS AND BREAK SHARP EDGES. DIMENSIONS ARE IN INCHES AND APPLY AFTER FINISH.

TOLERANCES:
DECIMALS XXX ±.005
XX ±.015
X ±.030
ANGLES ± 30 min
SURFACE FINISH 125

USED ON

Designed
Drawn RDI
Checked RSS
Reviewed MCB
Project Engineer
Reviewed
Reviewed
Approved
Chief of Ocean Engineering Branch

U.S. Coast Guard Headquarters
Civil Engineering

Title
NEW MINOR LIGHT SYSTEM
TERMINAL BLOCK

Date 30APR93

Third Angle Projection

All Dimensions in Inches
Tolerances 0.00±0.01 0.0±0.1

Cage Number	Drawing Number	Rev
0R6M6	161504-02	

Scale 2:1 SHT 3 OF 8

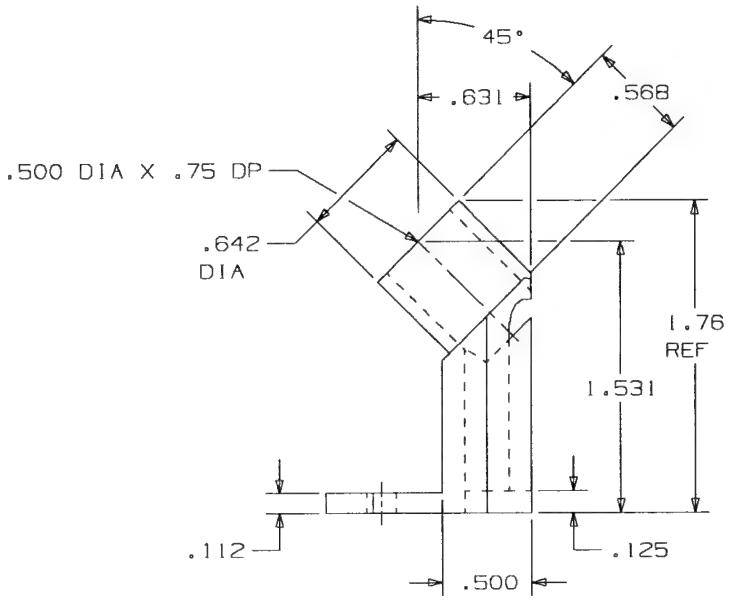

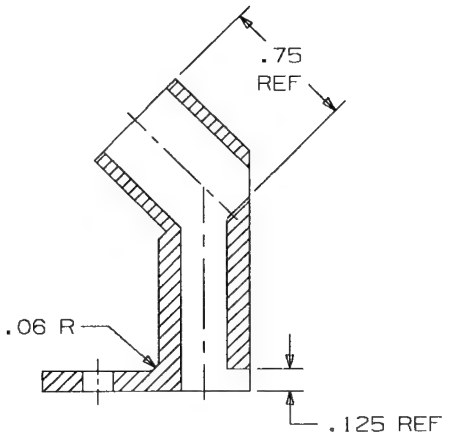

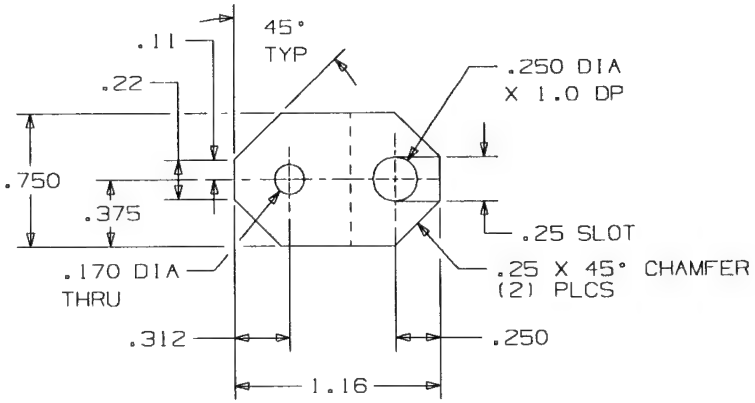

NOTE: MATERIAL
NYLON

OSRAM
SYLVANIA
100 Endicott Street
Danvers, MA 01923

Reference: Contract
DTCG23-87-C-20026

REF. DWG. NO.

CAD FILE:

ANSI Y14.5-1973
- FLATNESS
- STRAIGHTNESS
- ANGULARITY
- PERPENDICULARITY
- PARALLELISM
- CONCENTRICITY
- TRUE POSITION
- ROUNDNESS
- MAXIMUM MATERIAL CONDITION
- REGARDLESS OF FEATURE SIZE
- SYMMETRY

DO NOT SCALE THIS DRAWING

UNLESS OTHERWISE SPECIFIED REMOVE ALL BURRS AND BREAK SHARP EDGES. DIMENSIONS ARE IN INCHES AND APPLY AFTER FINISH.

TOLERANCES:
DECIMALS .XXX ±.005
.XX ±.015
.X ±.030
ANGLES ±30 min
SURFACE FINISH

USED ON

Designed
Drawn RDI
Checked RSS
Reviewed MCB
Project Engineer
Reviewed
Reviewed

U.S. Coast Guard Headquarters
Civil Engineering

Title
NEW MINOR LIGHT SYSTEM
PHOTO RESISTOR
MOUNT HOLDER

Approved
Chief of Ocean Engineering Branch

Date
30APR93

Third Angle Projection

All Dimensions in Inches
Tolerances 0.00±0.01 0.0±0.1

Cage Number	Drawing Number	Rev
0R6M6	161504-03	

Scale 1:1

SHT 4 OF 8

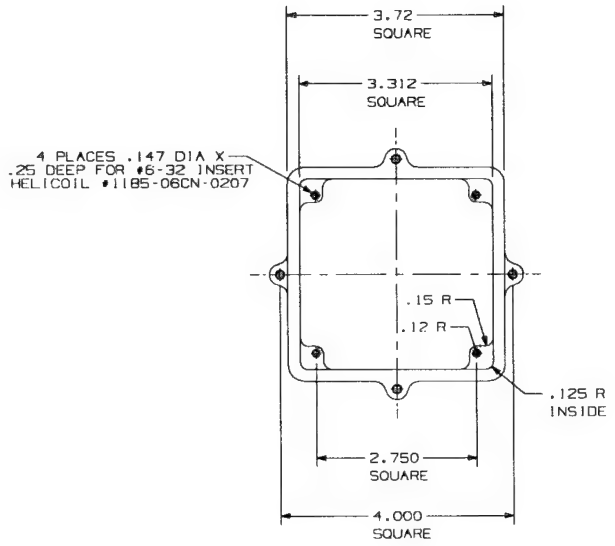

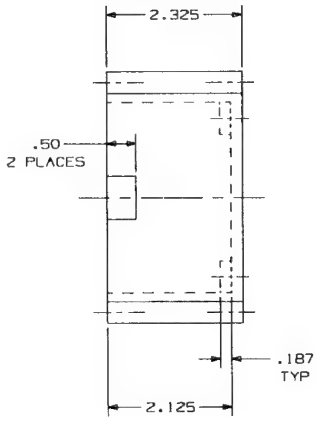

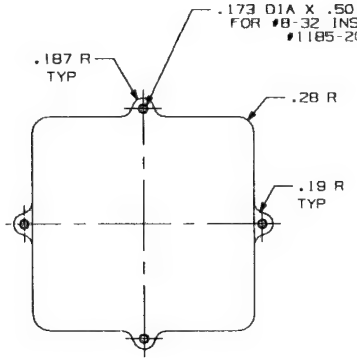

NOTE: MATERIAL
GREY PVC

OSRAM
SYLVANIA
100 Endicott Street
Danvers, MA 01923

Reference: Contract
DTCG23-87-C-20026

U.S. Coast Guard Headquarters
Civil Engineering

NEW MINOR LIGHT SYSTEM

POWER SUPPLY
BOX BOTTOM

30APR93

OR6M6 | 161504-05

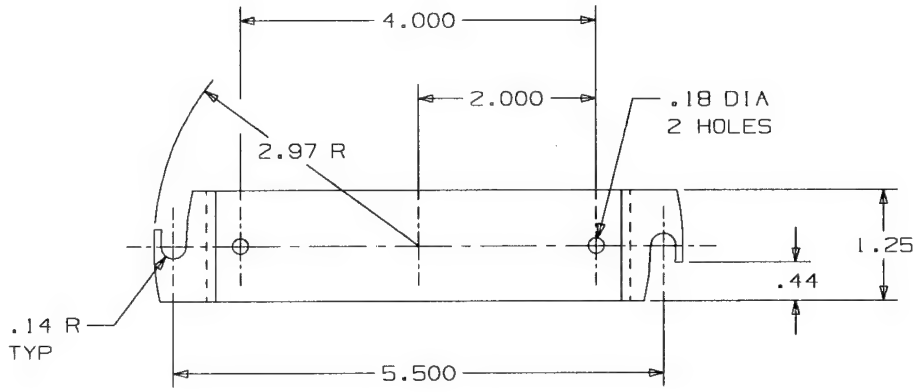

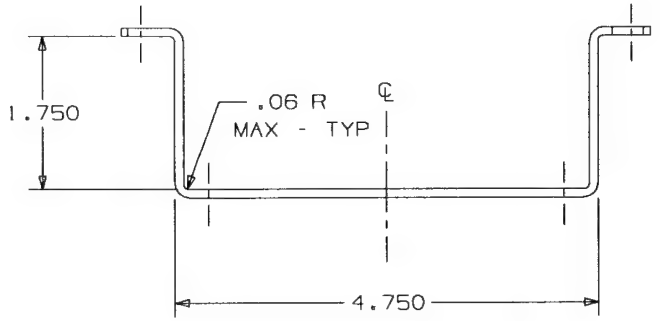

NOTE: MATERIAL
ALUMINUM

REF. DWG. NO.		Designed	U.S. Coast Guard Headquarters
CAD FILE:		Drawn RDI	Civil Engineering
ANSI Y14.5-1973	DO NOT SCALE THIS DRAWING	Checked RSS	
⏥ FLATNESS	UNLESS OTHERWISE SPECIFIED REMOVE ALL BURRS AND BREAK SHARP EDGES. DIMENSIONS ARE IN INCHES AND APPLY AFTER FINISH.	Revised MCB	Title NEW MINOR LIGHT SYSTEM
- STRAIGHTNESS		Project Engineer	BRACKET
∠ ANGULARITY		Revised	
⊥ PERPENDICULARITY	TOLERANCES:	Revised	Approved Date
// PARALLELISM	DECIMALS .XXX ±.005 .XX ±.015 .X ±.030		Chief of Ocean Engineering Branch 30APR93
◎ CONCENTRICITY	ANGLES ±30 min		
⌖ TRUE POSITION	SURFACE FINISH 125		
○ ROUNDNESS	USED ON	Third Angle Projection	Cage Number OR6M6 / Drawing Number 161504-08 / Rev
Ⓜ MAXIMUM MATERIAL CONDITION		All Dimensions in Inches Tolerances 0.00±0.01 0.0±0.1	Scale [1] / SHT 8 OF 8
Ⓢ REGARDLESS OF FEATURE SIZE			
⌯ SYMMETRY			

OSRAM
SYLVANIA
100 Endicott Street
Danvers, MA 01923

Reference: Contract
DTCG23-87-C-20026

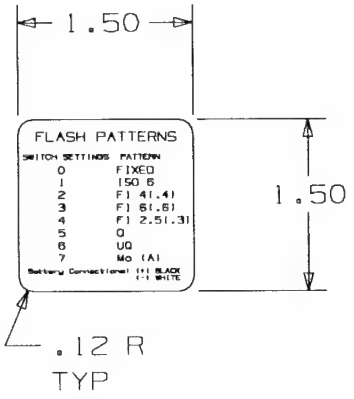

NOTE: PATTERN VALUES TO BE DETERMINED

OSRAM SYLVANIA
100 Endicott Street
Danvers, MA 01923

Reference: Contract
DTCG23-87-C-20026

REF. DWG. NO.

CAD FILE:

ANSI Y14.5-1973
- FLATNESS
- STRAIGHTNESS
- ANGULARITY
- PERPENDICULARITY
- PARALLELISM
- CONCENTRICITY
- TRUE POSITION
- ROUNDNESS
- MAXIMUM MATERIAL CONDITION
- REGARDLESS OF FEATURE SIZE
- SYMMETRY

DO NOT SCALE THIS DRAWING

UNLESS OTHERWISE SPECIFIED REMOVE ALL BURRS AND BREAK SHARP EDGES. DIMENSIONS ARE IN INCHES AND APPLY AFTER FINISH.

TOLERANCES:
DECIMALS XXX ±.005
XX ±.015
X ±.030
ANGLES ±30 min
SURFACE FINISH 125

USED ON

Designed
Drawn RDI
Checked RSS
Reviewed MCB
Project Engineer
Reviewed
Reviewed
Approved
Chief of Ocean Engineering Branch

U.S. Coast Guard Headquarters
Civil Engineering

Title
NEW MINOR LIGHT SYSTEM
FLASH PATTERN LABEL

Date 30APR93

Third Angle Projection
All Dimensions in Inches
Tolerances 0.00±0.01 0.0±0.1

Cage Number	Drawing Number	Rev
0R6M6	161504-06	

Scale 1:1 SHT 7 OF 8

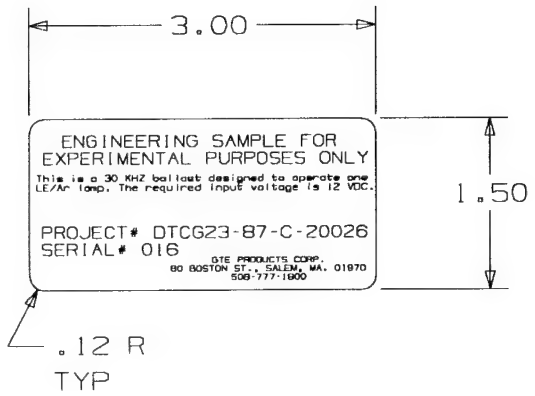

OSRAM SYLVANIA
100 Endicott Street
Danvers, MA 01923

Reference: Contract
DTCG23-87-C-20026

REF. DWG. NO.

CAD FILE:

ANSI Y14.5-1973
- FLATNESS
- STRAIGHTNESS
- ANGULARITY
- PERPENDICULARITY
- PARALLELISM
- CONCENTRICITY
- TRUE POSITION
- ROUNDNESS
- MAXIMUM MATERIAL CONDITION
- REGARDLESS OF FEATURE SIZE
- SYMMETRY

DO NOT SCALE THIS DRAWING

UNLESS OTHERWISE SPECIFIED REMOVE ALL BURRS AND BREAK SHARP EDGES. DIMENSIONS ARE IN INCHES AND APPLY AFTER FINISH.

TOLERANCES:
DECIMALS XXX ±.005
XX ±.015
X ±.030
ANGLES ±30 min
SURFACE FINISH 125

USED ON

Designed
Drawn RDI
Checked RSS
Reviewed MCB
Project Engineer
Reviewed
Reviewed
Approved
Chief of Ocean Engineering Branch

U.S. Coast Guard Headquarters
Civil Engineering

Title
NEW MINOR LIGHT SYSTEM
POWER SUPPLY
IDENTIFICATION LABEL

Date 30APR93

Third Angle Projection
All Dimensions in Inches
Tolerances 0.00±0.01 0.0±0.1

Cage Number	Drawing Number	Rev
0R6M6	161504-07	

Scale 1:1 SHT 8 OF 8

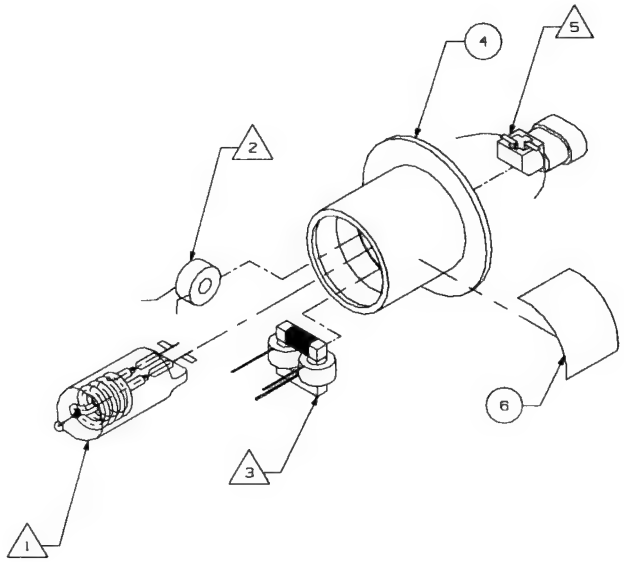

ITEM	QTY	SIZE	DWG. NO.	DESCRIPTION
6		B	161505-06	LAMP IDENTIFICATION LABEL
5		B	161505-05	MALE CONNECTOR
4		C	161505-04	LAMP BASE
3		B	161505-03	LAMP TRANSFORMER (T2)
2			Proc.Spec. 8.2.2	LAMP INDUCTOR (L2)
1		C	161505-01	JACKETED LAMP

U.S. Coast Guard Headquarters
Civil Engineering

Title
NEW MINOR LIGHT SYSTEM
LAMP ASSEMBLY
EXPLODED

Date 30APR93

Chief of Ocean Engineering Branch

Dwg Number 0R6M6 | Drawing Number 161505

OSRAM
SYLVANIA
100 Endicott Street
Danvers, MA 01923

Reference: Contract
DTCG23-87-C-20026

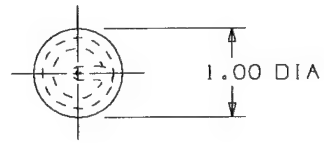

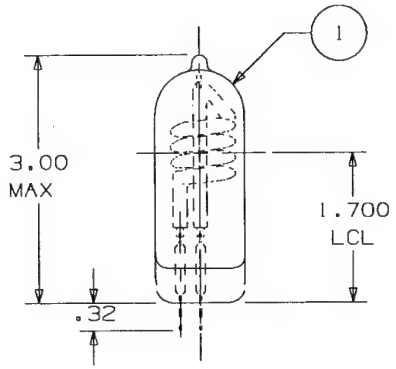

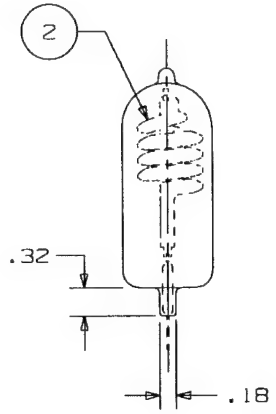

ITEM	QTY	SIZE	DWG. NO.	DESCRIPTION
2	1	C	161505-07	COILED LAMP
1	1		Proc.Spec. 5.3	OUTER JACKET

REF: DWG. NO.:

CAD FILE:

ANSI Y14.5-1973
- FLATNESS
- STRAIGHTNESS
- ANGULARITY
- PERPENDICULARITY
- PARALLELISM
- CONCENTRICITY
- TRUE POSITION
- ROUNDNESS
- MAXIMUM MATERIAL CONDITION
- REGARDLESS OF FEATURE SIZE
- SYMMETRY

DO NOT SCALE THIS DRAWING

UNLESS OTHERWISE SPECIFIED REMOVE ALL BURRS AND BREAK SHARP EDGES. DIMENSIONS ARE IN INCHES AND APPLY AFTER FINISH.

TOLERANCES:
DECIMALS .XXX ±.005
.XX ±.015
.X ±.030
ANGLES ±30 min
SURFACE FINISH 125

USED ON

Designed
Drawn ROI
Checked RSS
Reviewed MCB
Project Engineer
Reviewed
Reviewed

U.S. Coast Guard Headquarters
Civil Engineering

Title
NEW MINOR LIGHT SYSTEM
JACKETED LAMP

Approved
Chief of Ocean Engineering Branch

Date 30APR93

Third Angle Projection

All Dimensions in Inches
Tolerances 0.00±0.01 0.0±0.1

Cage Number	Drawing Number	Rev
OR6M6	161505-01	

Scale 1:1

SHT 2 of 9

OSRAM
SYLVANIA
100 Endicott Street
Danvers, MA 01923

Reference: Contract
DTCG23-87-C-20026

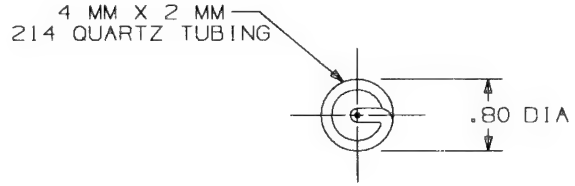

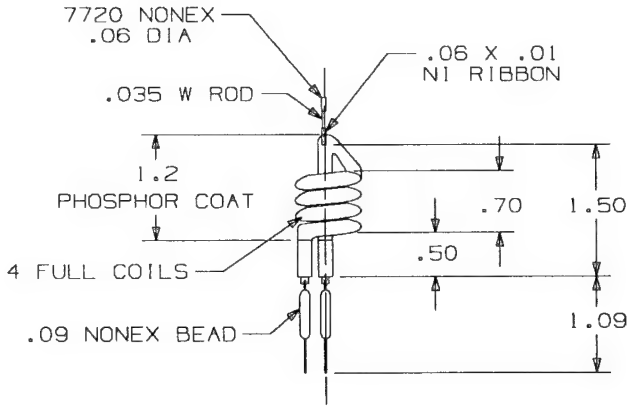

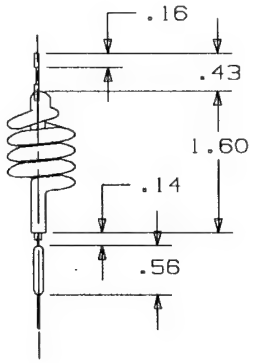

OSRAM
SYLVANIA
100 Endicott Street
Danvers, MA 01923

Reference: Contract
DTCG23-87-C-20026

REF. DWG. NO.

CAD FILE:

ANSI Y14.5-1973
⏥ FLATNESS
– STRAIGHTNESS
∠ ANGULARITY
⊥ PERPENDICULARITY
// PARALLELISM
◎ CONCENTRICITY
⌖ TRUE POSITION
○ ROUNDNESS
Ⓜ MAXIMUM MATERIAL CONDITION
Ⓡ REGARDLESS OF FEATURE SIZE
⌯ SYMMETRY

DO NOT SCALE THIS DRAWING

UNLESS OTHERWISE SPECIFIED REMOVE ALL BURRS AND BREAK SHARP EDGES. DIMENSIONS ARE IN INCHES AND APPLY AFTER FINISH.

TOLERANCES:
DECIMALS
.XXX ±.005
.XX ±.015
.X ±.030
ANGLES ±30 min
SURFACE FINISH 125

USED ON

Designed
Drawn ROI
Checked RSS
Reviewed MCB
Project Engineer
Reviewed
Reviewed
Approved
Chief of Ocean Engineering Branch

U.S. Coast Guard Headquarters
Civil Engineering

Title
NEW MINOR LIGHT SYSTEM
COILED LAMP

Date 30APR93

Third Angle Projection
All Dimensions in Inches
Tolerances 0.00±0.01 0.0±0.1

Cage Number	Drawing Number	Rev
0R6M6	161505-07	

Scale 1:1 SHT 3 OF 9

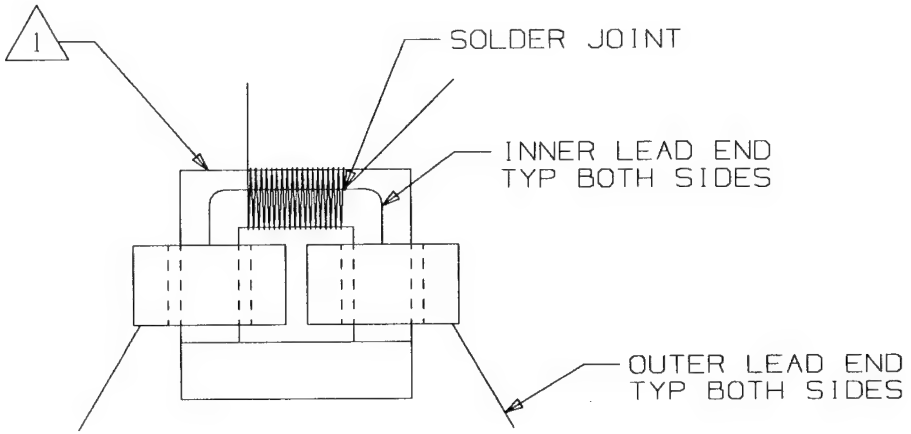

ITEM	QTY	SIZE	DWG. NO.	DESCRIPTION
1	1	C	161505-08	LAMP TRANSFORMER (T2) EXPLODED

REF. DWG. NO.

CAD FILE:

ANSI.Y14.5-1973
- FLATNESS
- STRAIGHTNESS
- ANGULARITY
- PERPENDICULARITY
- PARALLELISM
- CONCENTRICITY
- TRUE POSITION
- ROUNDNESS
- MAXIMUM MATERIAL CONDITION
- REGARDLESS OF FEATURE SIZE
- SYMMETRY

DO NOT SCALE THIS DRAWING

UNLESS OTHERWISE SPECIFIED REMOVE ALL BURRS AND BREAK SHARP EDGES. DIMENSIONS ARE IN INCHES AND APPLY AFTER FINISH.

TOLERANCES:
DECIMALS XXX ±.005
XX ±.015
X ±.030
ANGLES ±30 min
SURFACE FINISH 125

USED ON

Designed
Drawn RDI
Checked RSS
Reviewed MCB
Project Engineer
Reviewed
Reviewed

U.S. Coast Guard Headquarters
Civil Engineering

Title
NEW MINOR LIGHT SYSTEM
LAMP
TRANSFORMER (T2)

Approved
Chief of Ocean Engineering Branch

Date 30APR93

Third Angle Projection

All Dimensions in Inches
Tolerances 0.00±0.01 0.0±0.1

Cage Number	Drawing Number	Rev
0R6M6	161505-03	

Scale 2:1 SHT 4 OF 9

OSRAM
SYLVANIA
100 Endicott Street
Danvers, MA 01923

Reference: Contract
DTCG23-87-C-20026

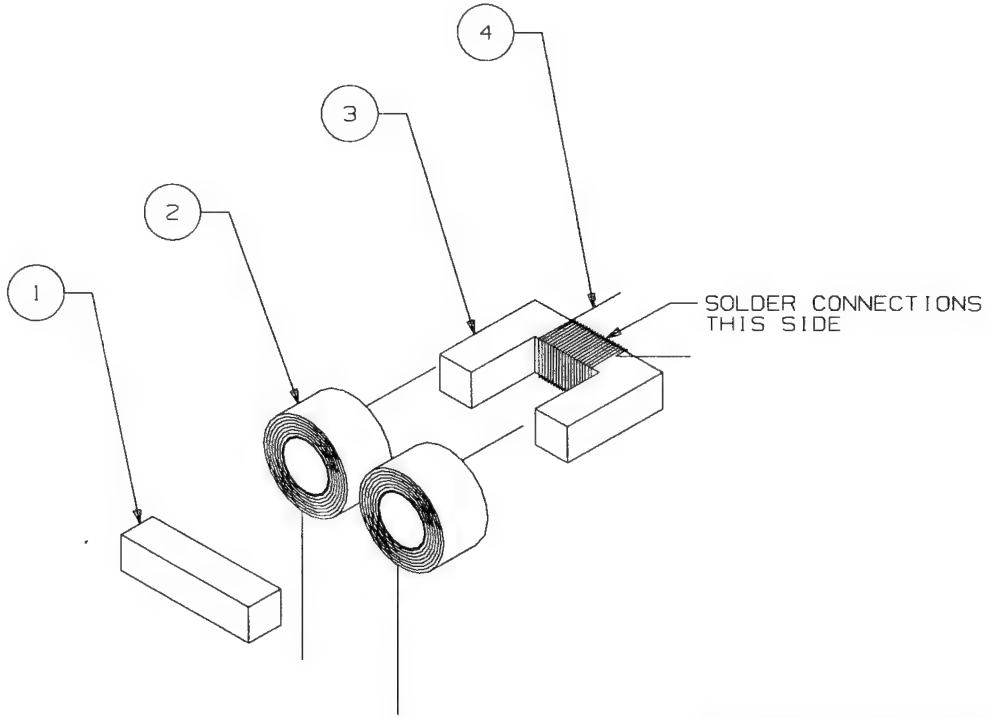

ITEM	QTY	SIZE	DWG. NO.	DESCRIPTION
4	1		Proc.Spec. 6.2.1	TRANSFORMER WIRE
3	1		Proc.Spec. 6.2.1	U-CORE
2	1		Proc.Spec. 6.2.1	LAMP COILS
1	1		Proc.Spec. 6.2.1	TRIMMED U-CORE

REF. DWG. NO.

CAD FILE:

ANSI Y14.5-1973
⏥ FLATNESS
– STRAIGHTNESS
∠ ANGULARITY
⊥ PERPENDICULARITY
// PARALLELISM
◎ CONCENTRICITY
⌖ TRUE POSITION
○ ROUNDNESS
Ⓜ MAXIMUM MATERIAL CONDITION
Ⓡ REGARDLESS OF FEATURE SIZE
⌯ SYMMETRY

DO NOT SCALE THIS DRAWING
UNLESS OTHERWISE SPECIFIED REMOVE ALL BURRS AND BREAK SHARP EDGES. DIMENSIONS ARE IN INCHES AND APPLY AFTER FINISH.
TOLERANCES:
DECIMALS .XXX ±.005
.XX ±.015
.X ±.030
ANGLES ±30 min
SURFACE FINISH 125

USED ON

Designed
Drawn RDI
Checked RSS
Reviewed MCB
Project Engineer
Reviewed
Reviewed

U.S. Coast Guard Headquarters
Civil Engineering

Title
NEW MINOR LIGHT SYSTEM
LAMP TRANSFORMER
T2 EXPLODED

Approved
Chief of Ocean Engineering Branch

Date
30APR93

Third Angle Projection
All Dimensions in Inches
Tolerances 0.00±0.01 0.0±0.1

Cage Number	Drawing Number	Rev
0R6M6	161505-08	

Scale 2:1 SHT 5 OF 9

OSRAM
SYLVANIA
100 Endicott Street
Danvers, MA 01923

Reference: Contract
DTCG23-87-C-20026

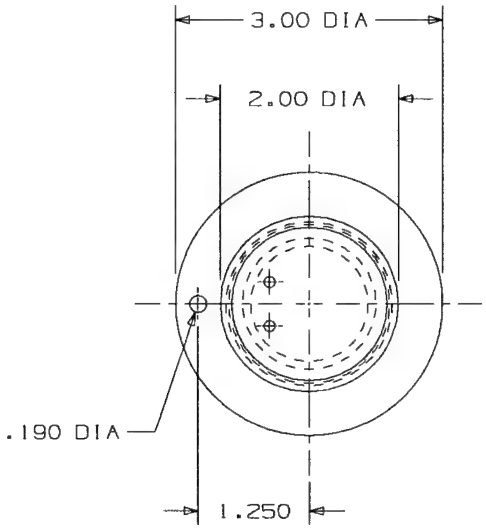

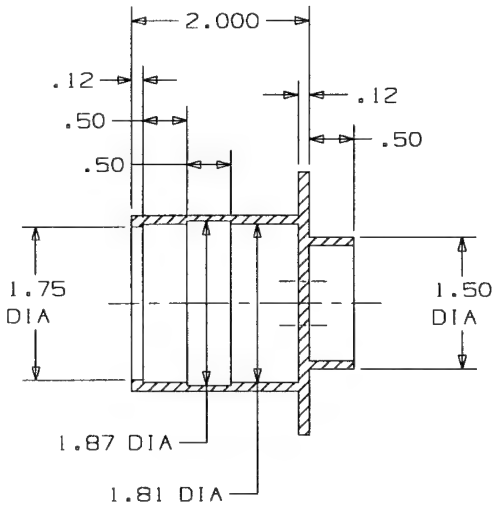

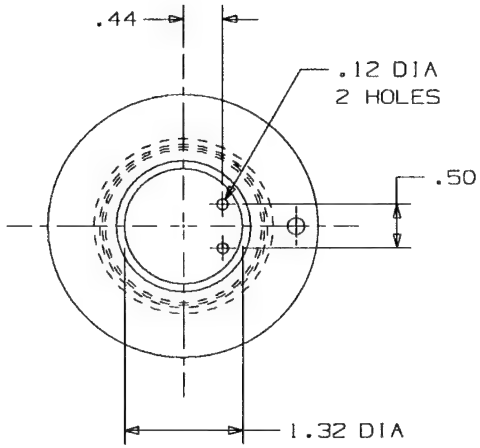

NOTE: MATERIAL
ACETAL - BLACK
DUPONT DELRIN - 570

OSRAM
SYLVANIA
100 Endicott Street
Danvers, MA 01923

Reference: Contract
DTCG23-87-C-20026

REF. DWG. NO.:

CAD FILE:

ANSI Y14.5-1973
⏥ FLATNESS
– STRAIGHTNESS
∠ ANGULARITY
⊥ PERPENDICULARITY
// PARALLELISM
◎ CONCENTRICITY
⌖ TRUE POSITION
○ ROUNDNESS
Ⓜ MAXIMUM MATERIAL CONDITION
Ⓢ REGARDLESS OF FEATURE SIZE
⌖ SYMMETRY

DO NOT SCALE THIS DRAWING
UNLESS OTHERWISE SPECIFIED REMOVE ALL BURRS AND BREAK SHARP EDGES. DIMENSIONS ARE IN INCHES AND APPLY AFTER FINISH.
TOLERANCES:
DECIMALS .XXX ±.005
.XX ±.015
.X ±.030
ANGLES ±30 min
SURFACE FINISH 125

USED ON

Designed
Drawn RDI
Checked RSS
Reviewed MCB
Project Engineer
Reviewed
Reviewed
Approved
Chief of Ocean Engineering Branch

U.S. Coast Guard Headquarters
Civil Engineering

Title
NEW MINOR LIGHT SYSTEM
LAMP BASE

Date 30APR93

Third Angle Projection
All Dimensions in Inches
Tolerances 0.00±0.01 0.0±0.1

Cage Number	Drawing Number	Rev
0R6M6	161505-04	

Scale 1:1 SHT 6 OF 9

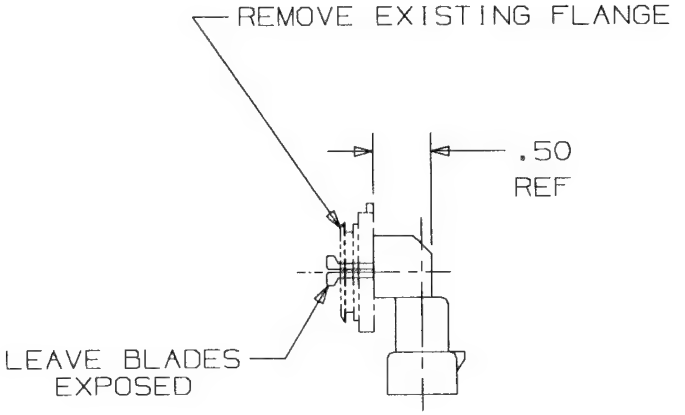

MAKE FROM:

HILLSBORO 9005 LAMP BASE - 9005/HB3
REF DWG F44-6A1300-1706

OSRAM
SYLVANIA
100 Endicott Street
Danvers, MA 01923

Reference: Contract
DTCG23-87-C-20026

REF. DWG. NO.

CAD FILE:

ANSI Y14.5-1973
- FLATNESS
- STRAIGHTNESS
- ANGULARITY
- PERPENDICULARITY
- PARALLELISM
- CONCENTRICITY
- TRUE POSITION
- ROUNDNESS
- MAXIMUM MATERIAL CONDITION
- REGARDLESS OF FEATURE SIZE
- SYMMETRY

DO NOT SCALE THIS DRAWING

UNLESS OTHERWISE SPECIFIED REMOVE ALL BURRS AND BREAK SHARP EDGES. DIMENSIONS ARE IN INCHES AND APPLY AFTER FINISH.

TOLERANCES:
DECIMALS
XXX ±.005
XX ±.015
X ±.030
ANGLES ±30 min
SURFACE FINISH

USED ON

Designed
Drawn RDI
Checked RSS
Reviewed MCB
Project Engineer
Reviewed
Reviewed
Approved
Chief of Ocean Engineering Branch

U.S. Coast Guard Headquarters
Civil Engineering

Title
NEW MINOR LIGHT SYSTEM
MALE CONNECTOR
AS PURCHASED

Date 30APR93

Third Angle Projection

All Dimensions in Inches
Tolerances 0.00±0.01 0.0±0.1

Cage Number	Drawing Number	Rev
0R6M6	161505-09	

Scale 1:1 SHT 7 OF 9

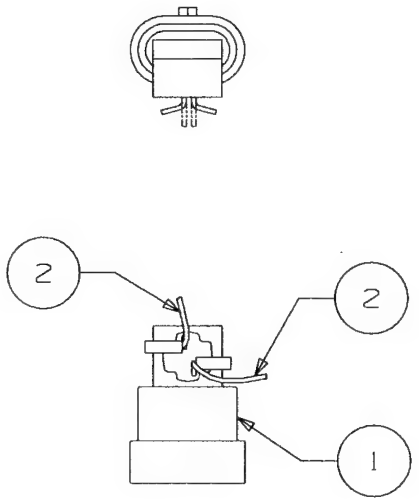

ITEM	QTY	SIZE	DWG. NO.	DESCRIPTION
2	2		Proc.Spec. 6.1.1	LAMP LEADS
1	1	B	161505-09	MALE CONNECTOR (PURCHASED)

REF. DWG. NO.

CAD FILE:

ANSI Y14.5-1973
- FLATNESS
- STRAIGHTNESS
- ANGULARITY
- PERPENDICULARITY
- PARALLELISM
- CONCENTRICITY
- TRUE POSITION
- ROUNDNESS
- MAXIMUM MATERIAL CONDITION
- REGARDLESS OF FEATURE SIZE
- SYMMETRY

DO NOT SCALE THIS DRAWING

UNLESS OTHERWISE SPECIFIED REMOVE ALL BURRS AND BREAK SHARP EDGES. DIMENSIONS ARE IN INCHES AND APPLY AFTER FINISH.

TOLERANCES:
DECIMALS XXX ±.005, XX ±.015, X ±.030
ANGLES ±30 min
SURFACE FINISH 125

USED ON

Designed
Drawn RDI
Checked RSS
Reviewed MCB
Project Engineer
Reviewed
Reviewed

U.S. Coast Guard Headquarters
Civil Engineering

Title
NEW MINOR LIGHT SYSTEM
MALE CONNECTOR

Approved
Chief of Ocean Engineering Branch
Date 30APR93

Third Angle Projection
All Dimensions in Inches
Tolerances 0.00±0.01 0.0±0.1

Cage Number	Drawing Number	Rev
0R6M6	161505-05	

Scale [:1] SHT 8 OF 9

OSRAM SYLVANIA
100 Endicott Street
Danvers, MA 01923

Reference: Contract DTCG23-87-C-20026

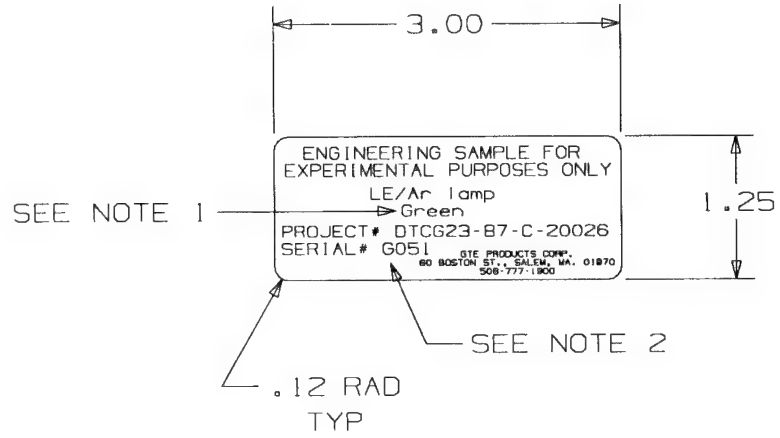

NOTES:

1. CAN BE GREEN, RED OR WHITE
2. CAN BE G, R OR W

OSRAM
SYLVANIA
100 Endicott Street
Danvers, MA 01923

Reference: Contract
DTCG23-87-C-20026

REF. DWG. NO.		Designed	U.S. Coast Guard Headquarters
CAD FILE:		Drawn RDI Checked RSS	Civil Engineering
ANSI Y14.5-1973 FLATNESS STRAIGHTNESS ANGULARITY PERPENDICULARITY PARALLELISM CONCENTRICITY TRUE POSITION ROUNDNESS MAXIMUM MATERIAL CONDITION REGARDLESS OF FEATURE SIZE SYMMETRY	DO NOT SCALE THIS DRAWING UNLESS OTHERWISE SPECIFIED REMOVE ALL BURRS AND BREAK SHARP EDGES. DIMENSIONS ARE IN INCHES AND APPLY AFTER FINISH. TOLERANCES: DECIMALS XXX ±.005, XX ±.015, X ±.030 ANGLES ±30 min SURFACE FINISH USED ON	Reviewed MCB Project Engineer Reviewed Reviewed	Title: NEW MINOR LIGHT SYSTEM LAMP IDENTIFICATION LABEL
		Approved Chief of Ocean Engineering Branch	Date: 30APR93
		Third Angle Projection All Dimensions in Inches Tolerances 0.00±0.01 0.0±0.1	Cage Number: 0R6M6 Drawing Number: 161505-06 Rev: Scale 1:1 SHT 9 OF 9

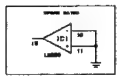

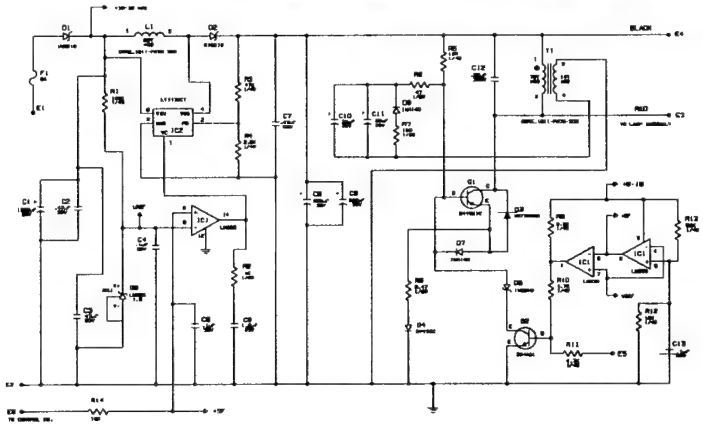

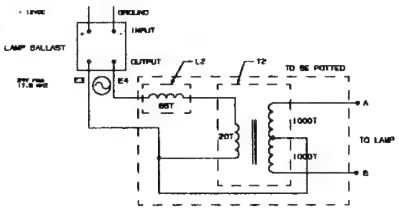

EXTERNAL CONNECTIONS

E1 ⟶ P15 CONTROLLER BOARD
E2 ⟶ P14 CONTROLLER BOARD
E3 ⟶ LAMP BASE CONNECTOR
E4 ⟶ LAMP BASE CONNECTOR
E5 ⟶ P5 CONTROLLER BOARD
E6 ⟶ P2 CONTROLLER BOARD

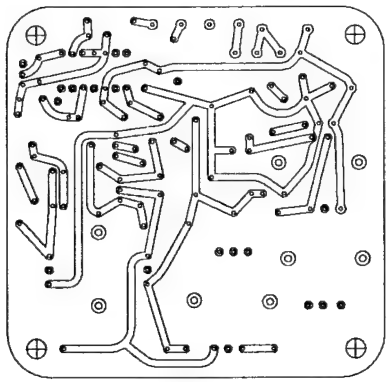

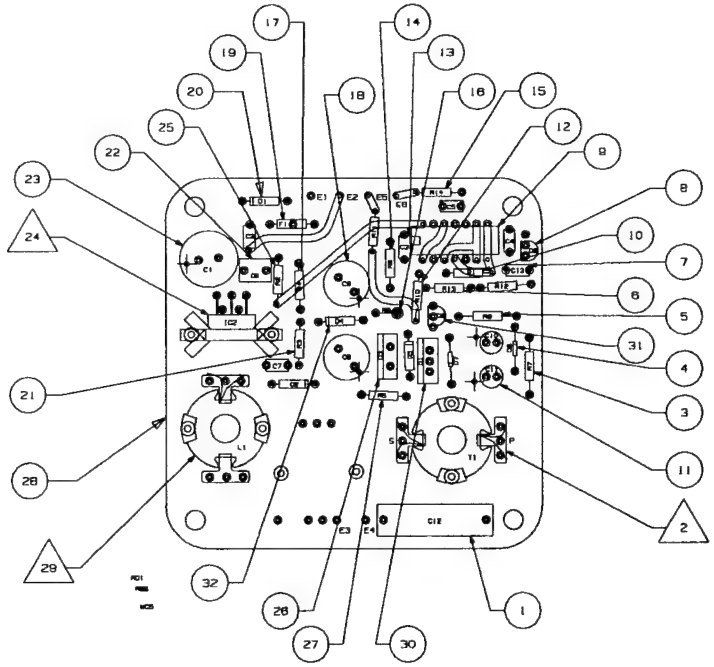

32	1		D4	DIODE BYV26C
31	1		Q2	TRANSISTOR 2N4401
30	1		Q1	TRANSISTOR D44VM10
29	1	Proc.Spec. 7.1.2	L1	POWER SUPPLY INDUCTOR (L1)
28	1	181508-01	A1	PRINTED CIRCUIT BOARD POWER SUPPLY
27	1		R5	RESISTOR 12K 1/4 W TF 5%
26	1		D3	DIODE MZT3008B
25	1		R2	RESISTOR 1K 1/4 W TF 5%
24	1	Proc.Spec. 7.1.3	IC2	HEAT SINK/IC2 COMPONENT
23	1		C1	CAPACITOR 1000UF 25V
22	1		C6	CAPACITOR 1.0UF 63V
21	1		R3	RESISTOR 47K 1/4 W TF 5%
20	3		D1,D2,D5	DIODE IN5818
19	1		F1	FUSE 5 AMPS
18	2		C8,C9	CAPACITOR 220UF 35V
17	1		R4	RESISTOR 2.2K 1/4 W TF 5%
16	1		R8	RESISTOR 0.47 1/4 W TF 5%
15	2		R12,R14	RESISTOR 10K 1/4 W TF 5%
14	1		R9	RESISTOR 8.2K 1/4 W TF 5%
13	3		C2,C3,C7	CAPACITOR .47UF 50V
12	2		R10,R11	RESISTOR 4.7K 1/4 W TF 5%
11	2		C10,C11	CAPACITOR 22UF 25V
10	1		R1	RESISTOR 100K 1/4 W TF 5%
9	1		IC1	IC LM339AN
8	1		D6	IC LM3852-2
7	3		C4,C5,C13	CAPACITOR .1UF 50V
6	1		R13	RESISTOR 58K 1/2 W TF 5%
5	1		R6	RESISTOR 47 1/2 W TF 5%
4	2		D8,D7	DIODE IN4148
3	1		R7	RESISTOR 150 1/2 W TF 5%
2	1	Proc.Spec. 7.1.1	T1	POWER SUPPLY TRANSFORMER (T1)
1	1		C12	CAPACITOR 0.22UF 250V
	5		E1,E2,E3 E4,E5	PIN INPUT
ITEM	QTY	DWG. NO.	CIRCUIT SYMBOL	DESCRIPTION

OSRAM
SYLVANIA
100 Endicott Street
Danvers, MA 01923

Reference: Contract
DTCG23-87-C-20026

U.S. Coast Guard Headquarters
Civil Engineering

NEW MINOR LIGHT SYSTEM

POWER SUPPLY BOARD
LAYOUT AND SCHEMATIC

30APR93

ORBMB 181508

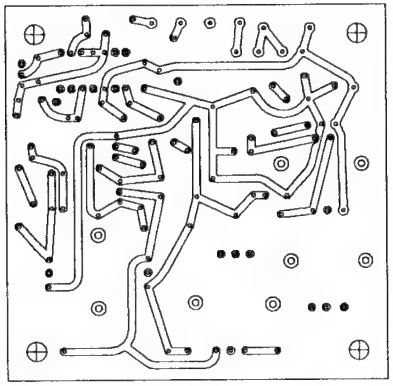

SOLDER SIDE
BOTTOM

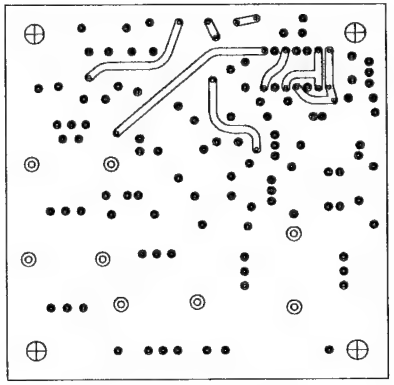

COMP SIDE
TOP

OSRAM
SYLVANIA
100 Endicott Street
Danvers, MA 01923

Reference: Contract
DTCG23-87-C-20026

REF. DWG. NO.		Designed Drawn RDI Checked RSS	U.S. Coast Guard Headquarters Civil Engineering
CAD FILE:		Reviewed MCB	Title NEW MINOR LIGHT SYSTEM PRINTED CIRCUIT BOARD POWER SUPPLY
ANSI Y14.5-1973 ⏥ FLATNESS – STRAIGHTNESS ∠ ANGULARITY ⊥ PERPENDICULARITY // PARALLELISM ◎ CONCENTRICITY ⌖ TRUE POSITION ○ ROUNDNESS Ⓜ MAXIMUM MATERIAL CONDITION Ⓢ REGARDLESS OF FEATURE SIZE ⌯ SYMMETRY	DO NOT SCALE THIS DRAWING UNLESS OTHERWISE SPECIFIED REMOVE ALL BURRS AND BREAK SHARP EDGES. DIMENSIONS ARE IN INCHES AND APPLY AFTER FINISH. TOLERANCES: DECIMALS XXX ±.005 XX ±.015 X ±.030 ANGLES ±30 min SURFACE FINISH 125	Project Engineer Reviewed	
		Reviewed	Approved Chief of Ocean Engineering Branch Date 30APR93
	USED ON	Third Angle Projection All Dimensions in Inches Tolerances 0.00±0.01 0.0±0.1	Cage Number 0R6M6 | Drawing Number 161506-01 | Rev Scale 1:1 | SHT 2 OF 2

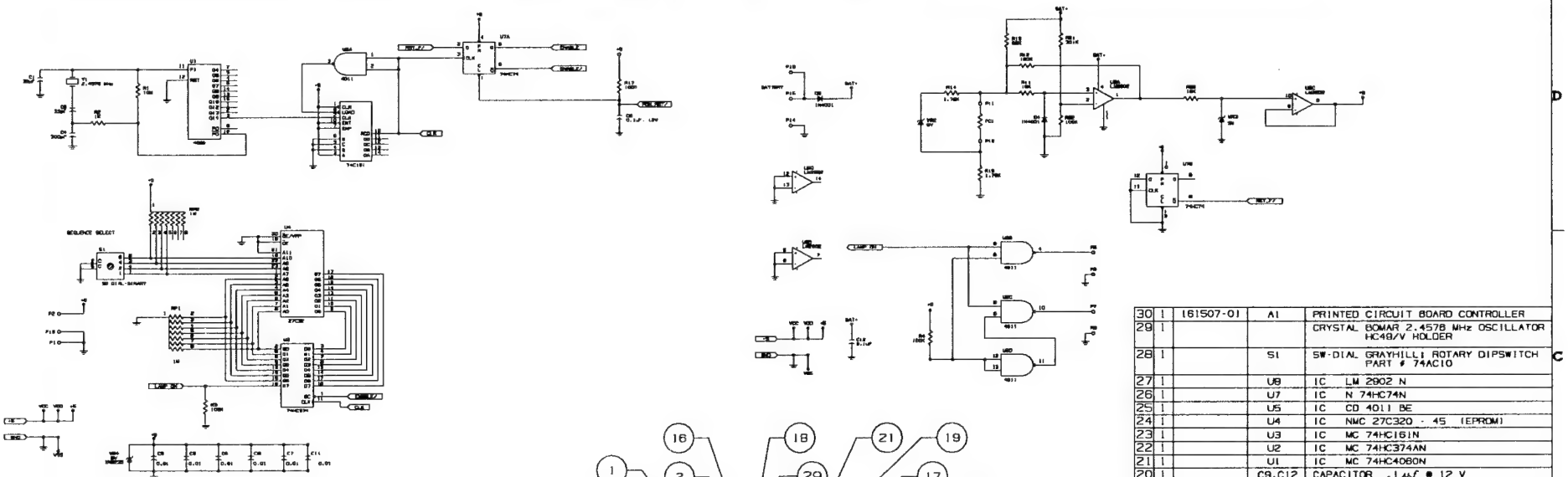

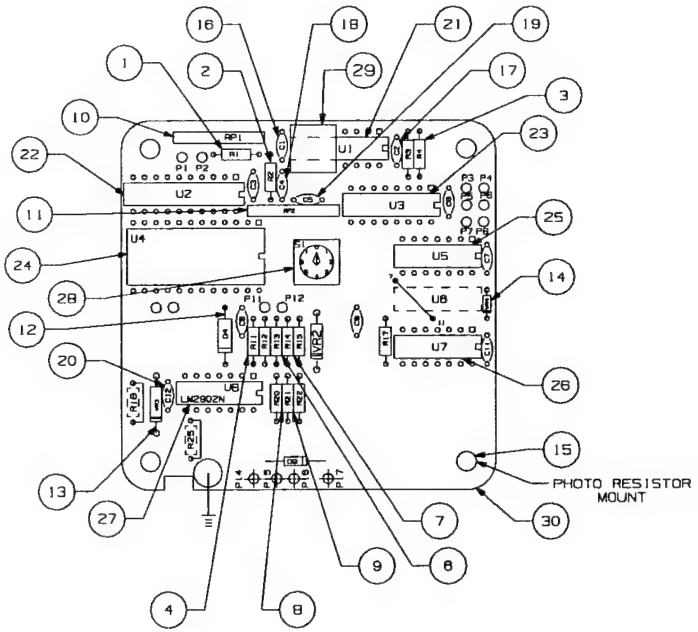

EXTERNAL CONNECTIONS

P2 ⟶ E6 POWER SUPPLY BOARD
P5 ⟶ E5 POWER SUPPLY BOARD
P11 ⟶ PHOTO RESISTOR
P12 ⟶ PHOTO RESISTOR
P14 ⟶ E2 POWER SUPPLY BOARD
P15 ⟶ E1 POWER SUPPLY BOARD
P18 ⟶ 10-18 vdc BATTERY

WIRING MODIFICATIONS TO BOARD 1078024
REV 00 FOR STANDARD LAMP OPERATIONS
WITH PHOTO CELL CONTROL:

TOP 1. R18 - ⏚ (SHORT)
TOP 2. R25 - ⏚ (SHORT)
TOP 3. CONNECT U8 PIN 11 TO U8 PIN 7
TOP 4. ZENER DIODE (VR4) IN PLACE OF C10

BOTTOM 5. CONNECT U8 PIN 12 TO U8 PIN 13
BOTTOM 6. CONNECT U8 PIN 5 TO U8 PIN 6
BOTTOM 7. CONNECT U7 PIN 12 TO U7 PIN 13 TO U7 PIN 14
BOTTOM 8. CONNECT P15 TO P18

NOTES:

1. PHOTOCELL ALIGNS INTO THE HOLE INDICATED "PC MOUNT"
2. WIRES E3 & E4 ARE PASSED THROUGH CUT NEXT TO GROUND CONNECTION

30	1	161507-01	A1	PRINTED CIRCUIT BOARD CONTROLLER
29	1			CRYSTAL BOMAR 2.4578 MHz OSCILLATOR HC49/V HOLDER
28	1		S1	SW-DIAL GRAYHILL ROTARY DIPSWITCH PART # 74AC10
27	1		U8	IC LM 2902 N
26	1		U7	IC N 74HC74N
25	1		U5	IC CD 4011 BE
24	1		U4	IC NMC 27C320 - 45 (EPROM)
23	1		U3	IC MC 74HC161N
22	1		U2	IC MC 74HC374AN
21	1		U1	IC MC 74HC4080N
20	1		C9,C12	CAPACITOR .1 µf @ 12 V
19	1		C5	CAPACITOR 33 pf @ 1 Kv
18	1		C4	CAPACITOR 300 pf @ 1 Kv
17	8		C2,C3,C6 C7,C8,C11	CAPACITOR .01 µf @ 100 V
16	1		C1	CAPACITOR 39 pf @ 1 Kv
15	1		PC1	PHOTO CELL AS SUPPLIED BY COAST GUARD
14	1		VR4	DIODE 1N5233B ZENER 6.0 V 1/2 W
13	2		VR2,VR3	DIODE 1N4733A ZENER 5.1 V 1 W
12	2		D4,D9	DIODE 1N4001
11	1		RP2	RESISTOR 1 M SIP BUSSED RESISTOR 5% BECKMAN INDUSTRIAL PART # L06 - 1C105
10	1		RP1	RESISTOR 1 M SIP BUSSED RESISTOR 2% BOURNES PART # 4308R - 8158
9	1		R21	RESISTOR 301 K 1/4 W 1%
8	1		R20	RESISTOR 10 K 1/4 W 5%
7	2		R14,R15	RESISTOR 1.78 K 1/4 W 1%
6	1		R13	RESISTOR 82 K 1/4 W 5%
5	1		R12	RESISTOR 180K 1/4 W 5%
4	1		R11	RESISTOR 10 K 1/4 W 5%
3	4		R3,R4 R17,R22	RESISTOR 100 K 1/4 W 5%
2	1		R2	RESISTOR 1K 1/4 W 5%
1	1		R1	RESISTOR 10M 1/4 W 5%
ITEM	QTY	DWG. NO.	CIRCUIT SYMBOL	DESCRIPTION

OSRAM SYLVANIA
100 Endicott Street
Danvers, MA 01923

Reference: Contract DTCG23-87-C-20026

U.S. Coast Guard Headquarters
Civil Engineering

NEW MINOR LIGHT SYSTEM

CONTROLLER BOARD LAYOUT AND SCHEMATIC

30APR93

OR6M6 | 161507

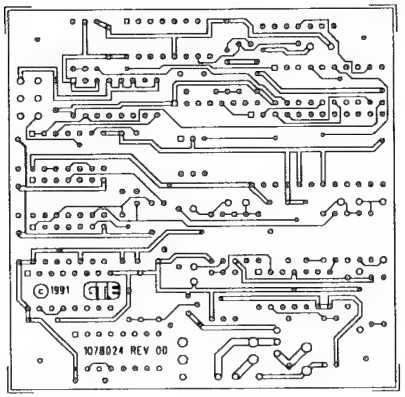

SOLDER SIDE
BOTTOM

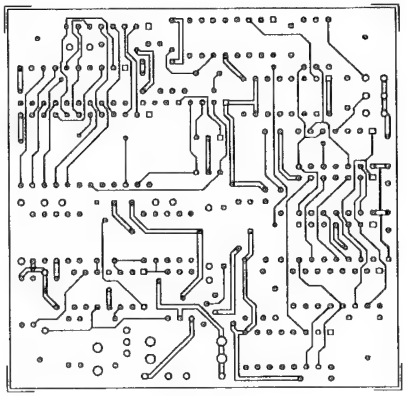

COMP SIDE
TOP

OSRAM
SYLVANIA
100 Endicott Street
Danvers, MA 01923

Reference: Contract
DTCG23-87-C-20026

REF. DWG. NO.		Designed	U.S. Coast Guard Headquarters
CAD FILE:		Drawn RDI Checked RSS	Civil Engineering
ANSI Y14.5-1973 o FLATNESS – STRAIGHTNESS ∠ ANGULARITY ⊥ PERPENDICULARITY // PARALLELISM ◎ CONCENTRICITY ⌖ TRUE POSITION ○ ROUNDNESS Ⓜ MAXIMUM MATERIAL CONDITION Ⓢ REGARDLESS OF FEATURE SIZE ⌯ SYMMETRY	DO NOT SCALE THIS DRAWING UNLESS OTHERWISE SPECIFIED REMOVE ALL BURRS AND BREAK SHARP EDGES. DIMENSIONS ARE IN INCHES AND APPLY AFTER FINISH. TOLERANCES: DECIMALS XXX ±.005 XX ±.015 X ±.030 ANGLES ±30 min SURFACE FINISH 125	Reviewed MCB Project Engineer Reviewed Reviewed	Title NEW MINOR LIGHT SYSTEM PRINTED CIRCUIT BOARD CONTROLLER
USED ON		Approved Chief of Ocean Engineering Branch	Date 30APR93
		Third Angle Projection All Dimensions in Inches Tolerances 0.00±0.01 0.0±0.1	Cage Number 0R6M6 | Drawing Number 161507-01 | Rev Scale 1:1 | SHT 2 OF 2

REVISIONS			
REV	DESCRIPTION	BY	DATE

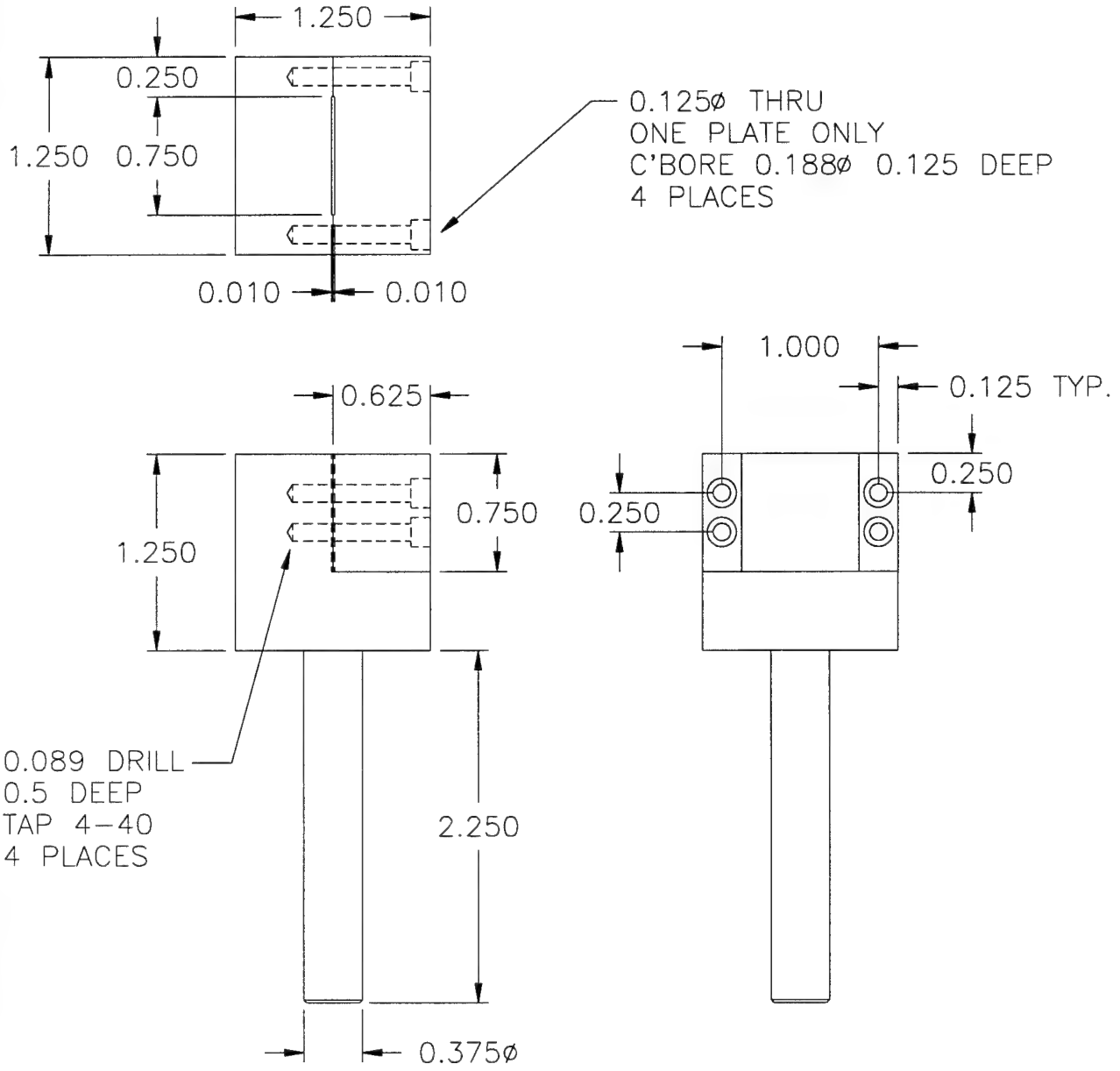

CAD DRAWING
PRINTOUT MAY NOT BE TO SCALE

OSRAM SYLVANIA

TOLERANCES UNLESS OTHERWISE SPECIFIED			
FRACTIONS	DECIMAL	METRIC	ANGLES
± 1/64	.xx ± .010 .xxx ± .005	x ± 0.4 x.x ± 0.25 x.xx ± 0.127	± 0.5°

ENGINEERING CENTER
60 BOSTON ST., SALEM, MA. 01970

MATERIAL: BRASS

TREATMENT: NONE

PROJECT: NEW MINOR LIGHT SYSTEM

ASSEMBLY:

PART NAME: PRESS SEAL JIG

DRAWING NUMBER: A41-527597

DRAWN	DATE	CHECKED	SCALE
M.MARCHETERRE	05/02/93	NONE	FULL

REVISIONS			
REV	DESCRIPTION	BY	DATE

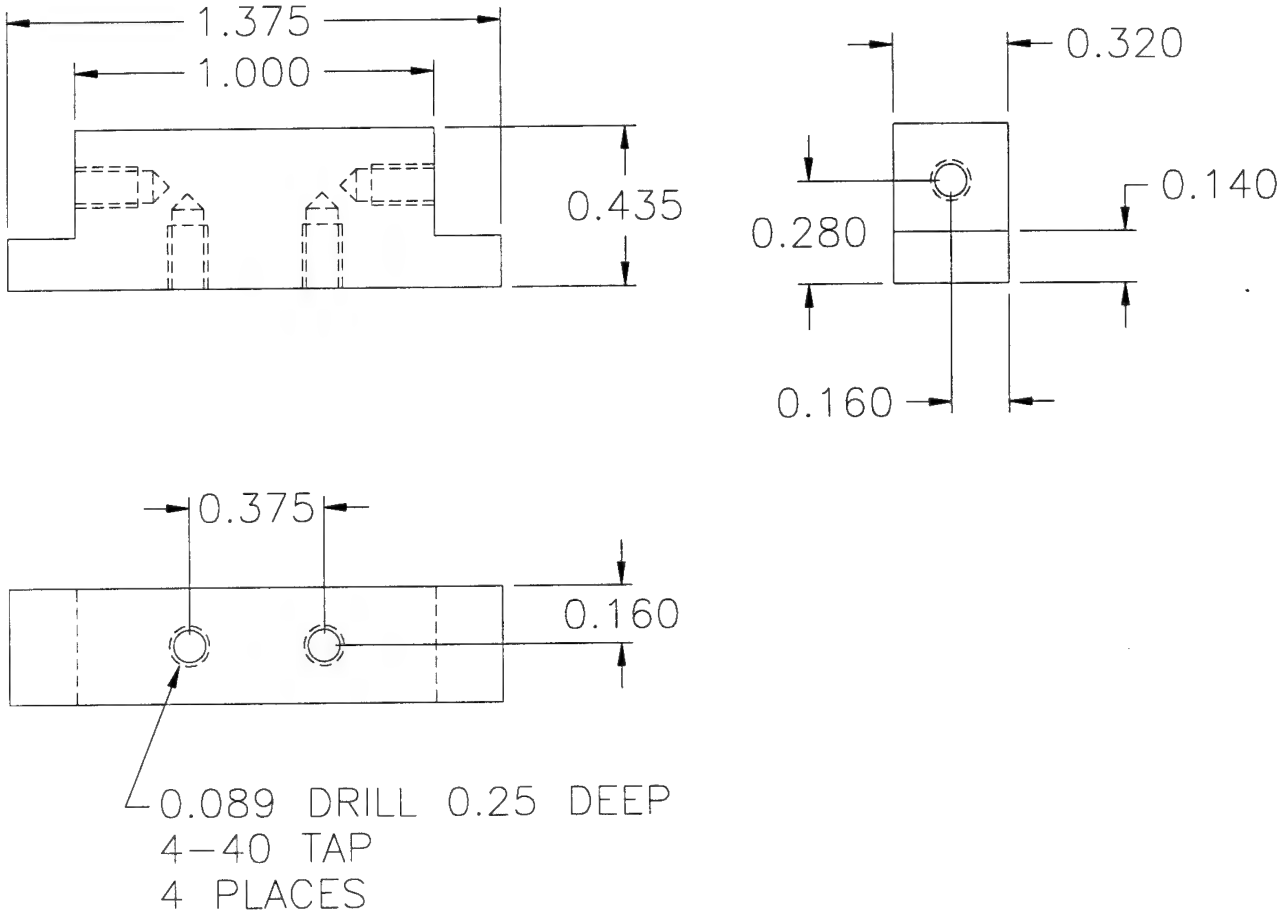

CAD DRAWING
PRINTOUT MAY NOT BE TO SCALE

OSRAM SYLVANIA

TOLERANCES UNLESS OTHERWISE SPECIFIED			
FRACTIONS	DECIMAL	METRIC	ANGLES
± 1/64	.xx ± .010 .xxx ± .005	x ± 0.4 x.x ± 0.25 x.xx ± 0.127	± 0.5°

ENGINEERING CENTER
60 BOSTON ST., SALEM, MA. 01970

MATERIAL: BRASS

TREATMENT: NONE

PROJECT: NEW MINOR LIGHT SYSTEM

ASSEMBLY:

PART NAME: PRESS FEET

DRAWN	DATE	CHECKED	SCALE
M.MARCHETERRE	05/02/93	NONE	2:1

DRAWING NUMBER: A41–527598

REVISIONS			
REV	DESCRIPTION	BY	DATE

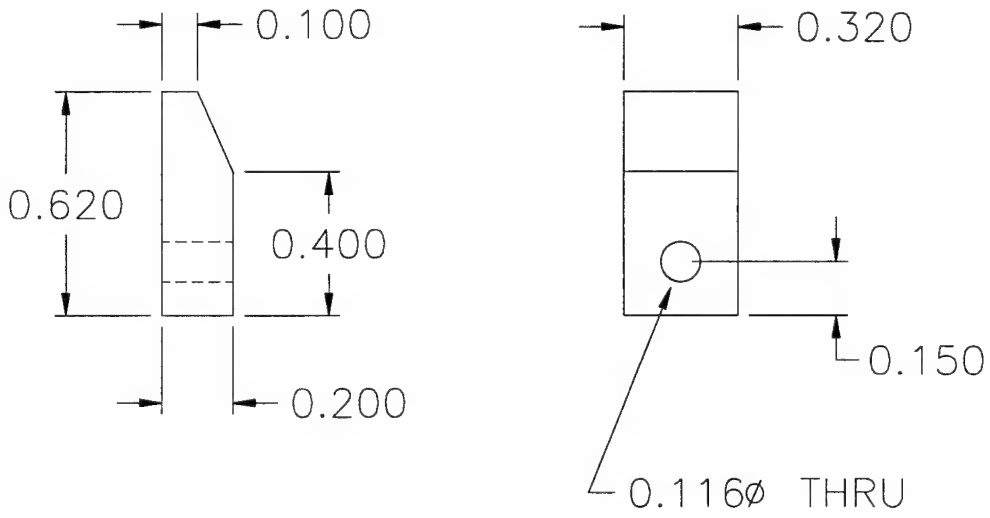

CAD DRAWING
PRINTOUT MAY NOT BE TO SCALE

OSRAM SYLVANIA

TOLERANCES UNLESS OTHERWISE SPECIFIED			
FRACTIONS	DECIMAL	METRIC	ANGLES
± 1/64	.xx ± .010 .xxx ± .005	x ± 0.4 x.x ± 0.25 x.xx ± 0.127	± 0.5°

ENGINEERING CENTER
60 BOSTON ST., SALEM, MA. 01970

MATERIAL: BRASS

TREATMENT: NONE

DRAWN	DATE	CHECKED	SCALE
M.MARCHETERRE	05/02/93	NONE	2:1

PROJECT: NEW MINOR LIGHT SYSTEM

ASSEMBLY:

PART NAME: PRESS FEET SIDE PLATES

DRAWING NUMBER: A41-527599

REVISIONS			
REV	DESCRIPTION	BY	DATE

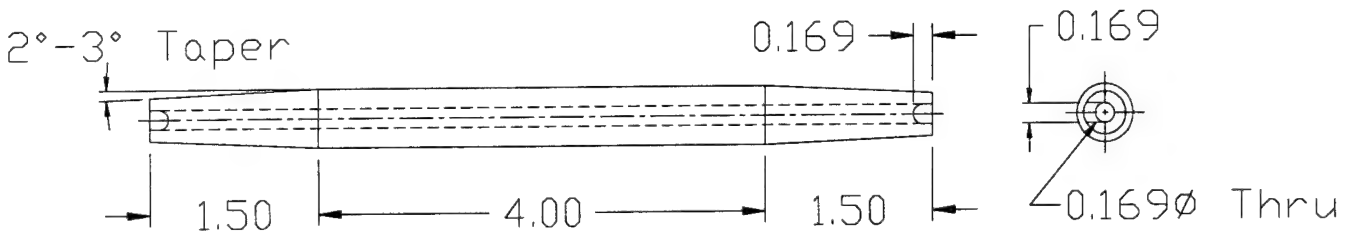

CAD DRAWING
PRINTOUT MAY NOT BE TO SCALE

OSRAM SYLVANIA

TOLERANCES UNLESS OTHERWISE SPECIFIED			
FRACTIONS	DECIMAL	METRIC	ANGLES
± 1/64	.xx ± .010 .xxx ± .005	x ± 0.4 x.x ± 0.25 x.xx ± 0.127	± 0.5°

ENGINEERING CENTER
60 BOSTON ST., SALEM, MA. 01970

MATERIAL: 20/20 GRAPHITE

TREATMENT: NONE

PROJECT: NEW MINOR LIGHT SYSTEM

ASSEMBLY:

PART NAME: MANDRIL

DRAWING NUMBER: A41-527600

DRAWN	DATE	CHECKED	SCALE
M.MARCHETERRE	05/02/93	NONE	1:2

APPENDIX C

The *Lamp Fabrication Process Specification* is included as *Appendix C* to this *Report*. As noted earlier, work performed previous to January 29, 1993 was conducted under the Electrical Products Group of GTE Products Corporation, predecessor organization to OSRAM SYLVANIA Inc.

OSRAM SYLVANIA INC.
GENERAL ENGINEERING

Contract DTCG23-87-C-20026:

Research and Development of a
Spectrally Selective Aids-to-Navigation
Signal Light System

PHASE III, TASK 4
REPROCUREMENT PACKAGE
PROCESS SPECIFICATION

Submitted to: U.S. Coast Guard
Headquarters
Washington, DC

Date: July 14, 1993

OSRAM SYLVANIA INC.
100 Endicott Street
Danvers, MA 01923

TABLE OF CONTENTS

1. INTRODUCTION 1

2. LE/Ar LAMP FABRICATION 2
   - 2.1 Electrode Assembly 2
     - 2.1.1 Balling Electrode 2
     - 2.1.2 Welding Assembly 4
   - 2.2 Coil Fabrication 10
     - 2.2.1 Winding Coil 10
     - 2.2.2 Filling Lamp 22
   - 2.3 Cleaning Processes 23
     - 2.3.1 Hydrogen Firing 23
     - 2.3.2 Vacuum Baking 24
     - 2.3.3 Acid Washing 27

3. PHOSPHORING OF LAMPS 28
   - 3.1 Preparation of Phosphor 28
     - 3.1.1 Preparation of Polyox Lacquer 28
     - 3.1.2 Preparation of Alon-C 29
     - 3.1.3 Mixing of Green Phosphor 30
   - 3.2 Preparation of Glass Resin Solution 31
   - 3.3 Phosphor Coating and Bake-Out 32

4. NEON LAMP FABRICATION 34
   - 4.1 Electrode Assembly 34
     - 4.1.1 Electrode 34
     - 4.1.2 Welding Assembly 36
   - 4.2 Coil Fabrication 37
     - 4.2.1 Winding Coil 37
     - 4.2.2 Filling Lamp 38

5. MOUNTING LAMPS IN OUTER JACKET 39
   - 5.1 Bottom Legs Assembly 39
   - 5.2 Top Support Assembly 41
   - 5.3 Outer Jacket Pre-Fabrication 44
   - 5.4 Coil Preparation for Jacketing 47
   - 5.5 Sealing Coil Assembly in Outer Jacket 50

6. BASING LAMP 55
   - 6.1 Lamp Base Assembly 55
     - 6.1.1 Male Connector 55
     - 6.1.2 Assembling Lamp Base 58
   - 6.2 Electrical Components 61
     - 6.2.1 Lamp Transformer (T2) 61
     - 6.2.2 Lamp Inductor (L2) 64
   - 6.3 Tuning Lamp to Power 65
   - 6.4 Potting Components into Base 68

7. POWER SUPPLY ASSEMBLY 73
7.1 Power Supply Board 73
7.1.1 Power Supply Transformer (T1) 73
7.1.2 Power Supply Inductor (L1) 75
7.1.3 Heat Sink / IC Component 76
7.1.4 Board Assembly 78
7.2 Controller Board 80
7.2.1 EPROM Programming and Burn-in 80
7.2.2 Board Assembly 84
7.2.3 Mounting Photoresistor 88
7.3 Power Supply Box Cover 90
7.3.1 Base Connector Assembly 90
7.3.2 Mounting Base Connector 92
7.3.3 Battery Terminals 95
7.4 Power Supply Box Bottom 97
7.4.1 Wiring Boards 97
7.4.2 Potting Power Supply Board 99
7.5 Final Assembly 101

8. TEST EQUIPMENT AND PROCEDURES 105
8.1 High Voltage Lamp Power Unit 105
8.2 Lamp Mounting Assembly 107
8.3 Testing Lamps 109

1. INTRODUCTION

In June, 1987 GTE's Electrical Products Group was awarded Contract DTCG-87-C-20026, *Research and Development of a Spectrally Selective Aids-to-Navigation Signal Light System,* to develop a New Minor Light System (NMLS) for the U.S. Coast Guard. In January 1993, GTE Corporation divested the Electrical Products Group to Siemens Corporation. The North American Lighting Group was merged with Siemens' OSRAM subsidiary to form OSRAM SYLVANIA Incorporated (OSI).

The work under this contract resulted in the development of two lamps each having a helical coiled geometry:

- A mercury-argon lamp designated as the Liquid Electrode (LE/Ar) lamp. This lamp uses a phosphor to produce green light.
- A neon lamp that produces red light.

In addition a power supply and a controller unit were developed to operate the lamps.

Section C-1-3.4.2.2 of the contract requires a Reprocurement Package which includes a Process Specification for fabrication and assembly of the lamps, controllers and power supplies. The following pages present detailed procedures, illustrations and specifications to produce the NMLS.

The text is printed in compact spacing to present, wherever possible, an entire process stage on one page and to keep the length of the document to the minimum necessary to reproduce the NMLS. Some of the drawings do not reproduce well in the page size of the report. Titles have been added to these to clarify the reference. All drawings were also submitted to the Coast Guard in original format as part of the Reprocurement Package.

2. LE/Ar LAMP FABRICATION

2.1 Electrode Assembly

2.1.1 Balling Electrode

1. Parts and Materials

    1. 0.010" x 0.035" tungsten rod, type NS-55 - Osram Sylvania part #429180

2. Tools and Equipment

    1. Auto Arc Precision Welder arc welder Model #TIG50A with foot pedal control
    2. Mounting jig with 0.012" hole to hold electrode wire
    3. Tweezers

3. Procedure

    1. Set arc welder as follows:

Current Control:	Standard
Course Current Adjust:	12
Fine Current Adjust:	0
High Frequency:	On
Contactor:	Remote
Post Flow Time:	4

    2. Place electrode wire 1mm away from the welder tip.
    3. Run welder for 3 to 5 seconds to form ball per Figure 2-1.

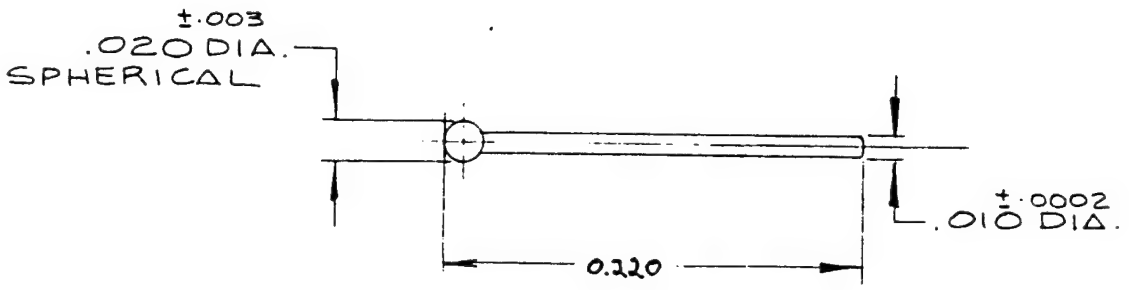

NOTES:
1. LENGTH UNDER BALL TO BE STRAIGHT WITHIN 0.002".
2. BALL END TO BE CONCENTRIC ABOUT CENTERLINE TO WITHIN 0.003" AND TO BE FREE FROM CRACKS & CRATERS.
3. TUMBLE PRIOR TO BALLING TO OBTAIN MINIMUM RADIUS OF 0.004" ON END.
4. MATERIAL TO BE FREE OF ANY SURFACE CONTAMINANTS, SPLITS, FISSURES AND BURRS.

Figure 2-1. Balled LE/Ar Lamp Electrode

2.1.2 Welding Assembly

1. Parts and Materials

    1. 0.010" balled tungsten rod per Section 2.1.1
    2. 0.020" molybdenum wire, type NH70 per Figure 2-2
       - Osram Sylvania part #429282
    3. 0.059" wide x 0.0007" thick molybdenum foil, 99.9% grade - H. Cross Co.
    4. 0.040" wide x 0.0016" thick platinum foil, 99.99% pure
       - Englehard Corporation type 9001

2. Tools and Equipment

    1. Unitek Weldmatic miniature welding head Model #1032B
    2. Unitek 60 watt seconds welding head Type 101
    3. Two (2) 1% thoriated welding electrodes per Figure 2-3
    4. Mounting jig per Figure 2-4
    5. Scissors or razor blade
    6. Tweezers
    7. Rubber finger cots

3. Procedure

    1. Weld end of platinum foil onto the flattened end of the lead wire.
    2. Break-off from rest of ribbon.
    3. Cut molybdenum foil into 0.197" lengths per Figure 2-5.
    4. Weld lead wire to the molybdenum foil using the jig per Figure 2-6.
    5. Weld platinum onto straight end of balled anode post.
    6. Break-off from rest of ribbon.
    7. Weld anode post on the foil, using the jig per Figure 2-6.
    8. Check the integrity of the welds.
        1. Hold the electrode with the tweezers.
        2. Hold the lead wire between two fingers.
        3. Gently pull along the length of the foil, being sure that the foil does not tear.
        4. If the neither of the welds separate, then they are good.
    9. Wet hydrogen fire per Section 2.3.1

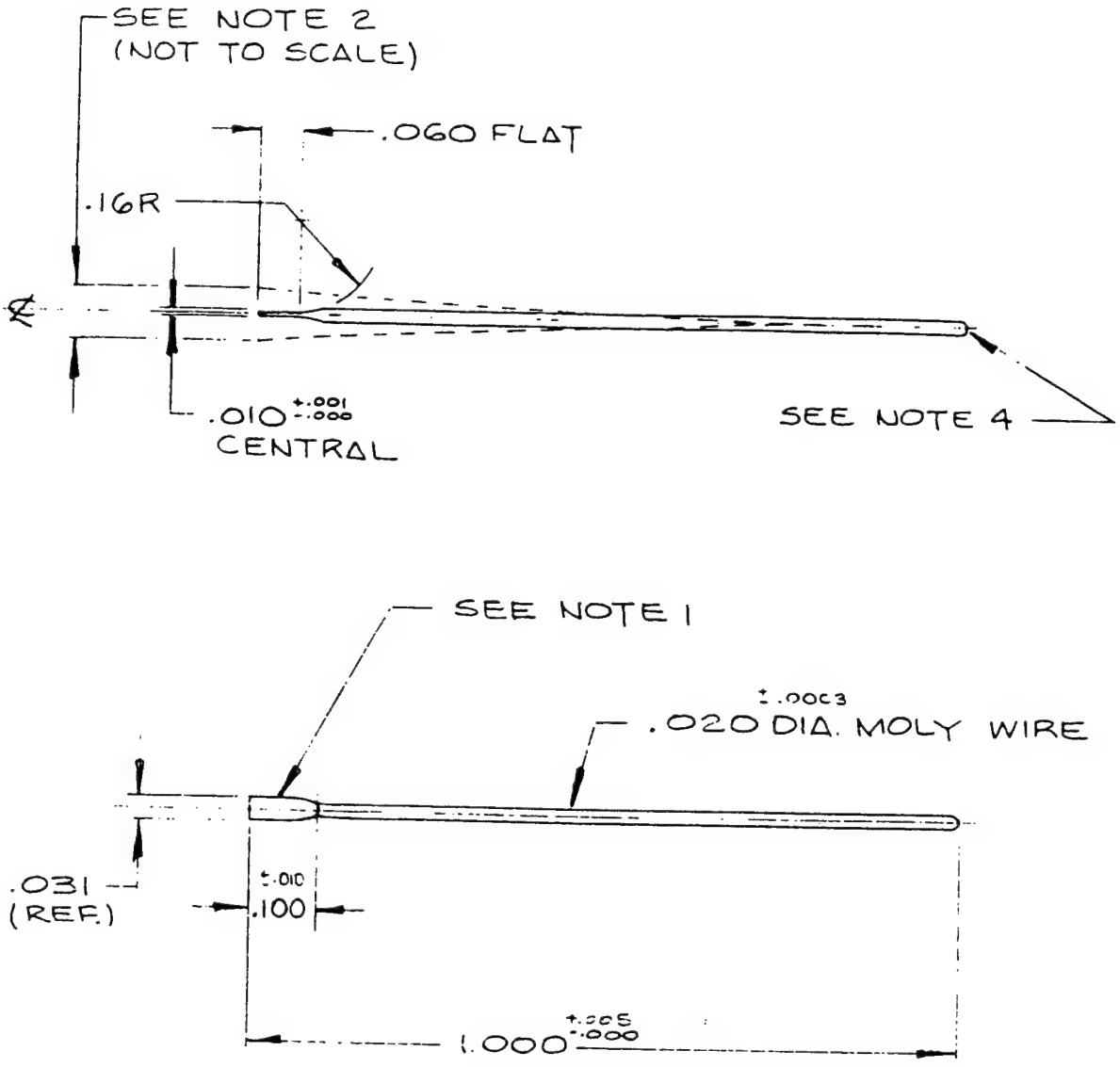

NOTES:
1. WIRE FLATTENED TO 0.010"/0.011" THICK BY 0.090"/0.110" LONG.
2. PART TO BE STRAIGHT AND CONCENTRIC ABOUT CENTERLINE END TO END WITHIN 0.002".
3. SURFACE SHALL BE SMOOTH, CLEAN AND FREE OF ANY SURFACE CONTAMINANTS, BREAKS AND FISSURES.
4. TUMBLE WIRE BLANK PRIOR TO FORMING TO OBTAIN A MINIMUM RADIUS OF 0.004" ON ENDS.

Figure 2-2. Electrode Inlead Wire

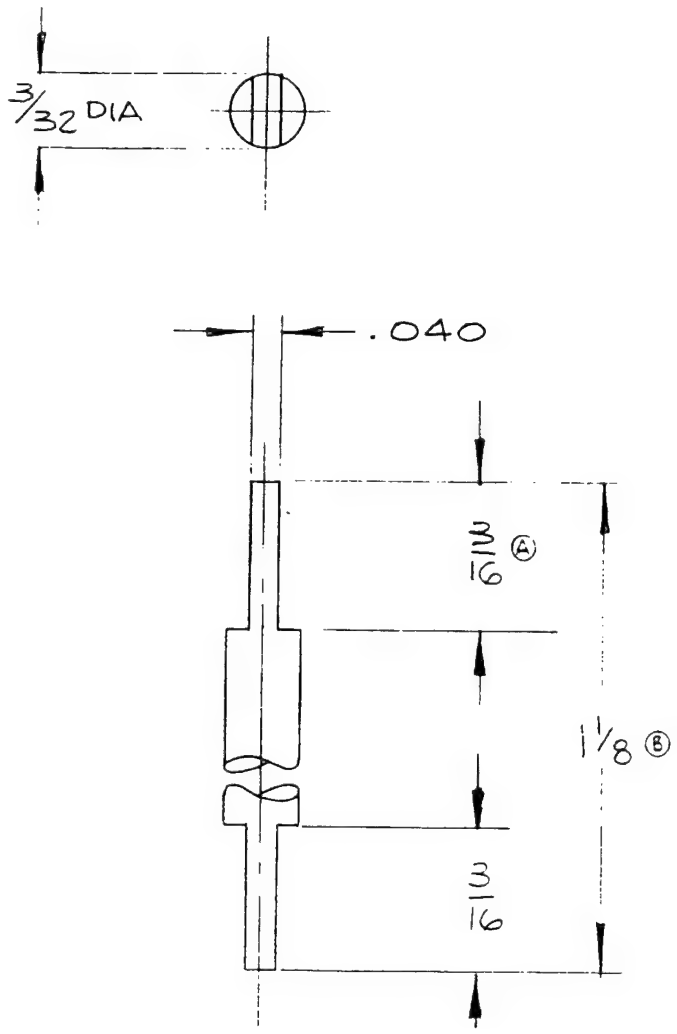

Figure 2-3. Welder Electrodes

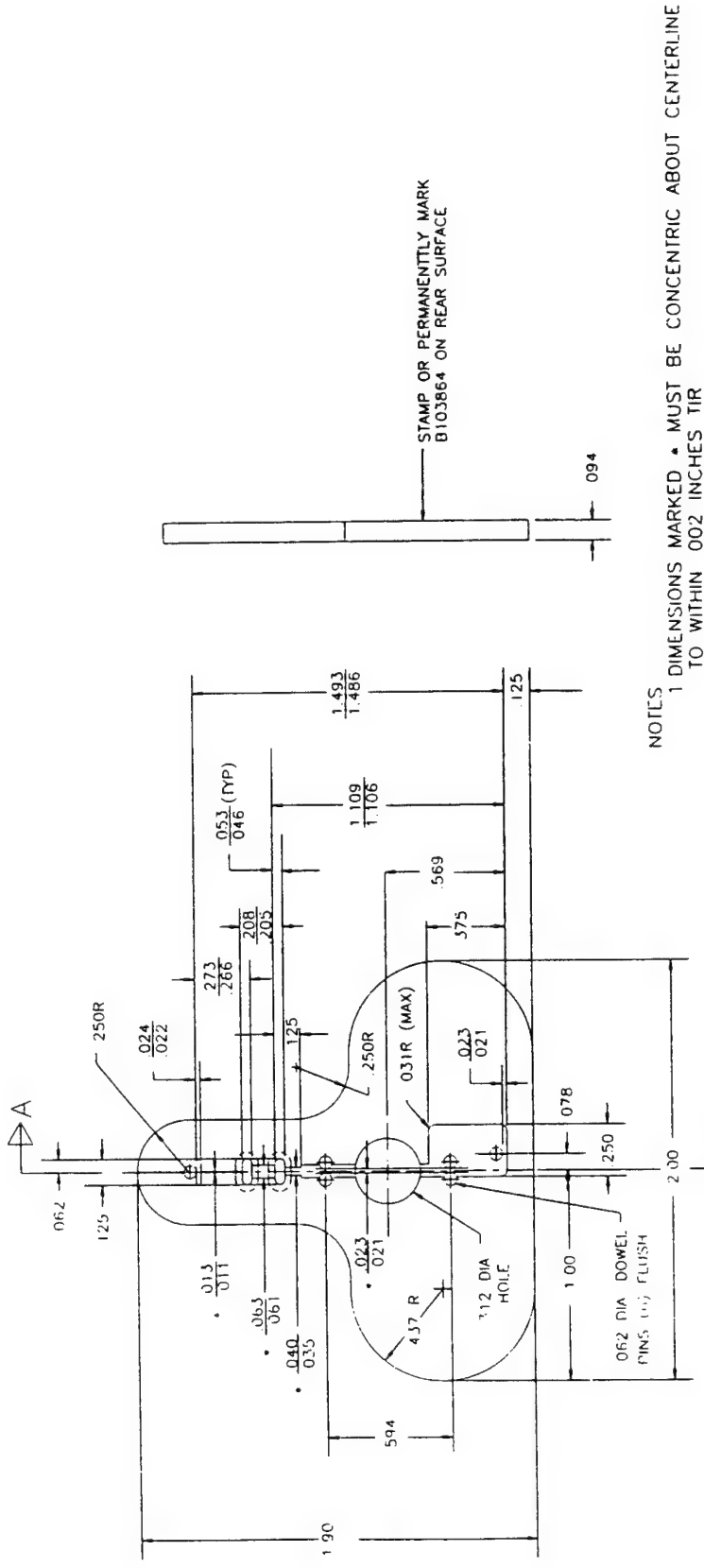

Figure 2-4. Electrode Welding Jig

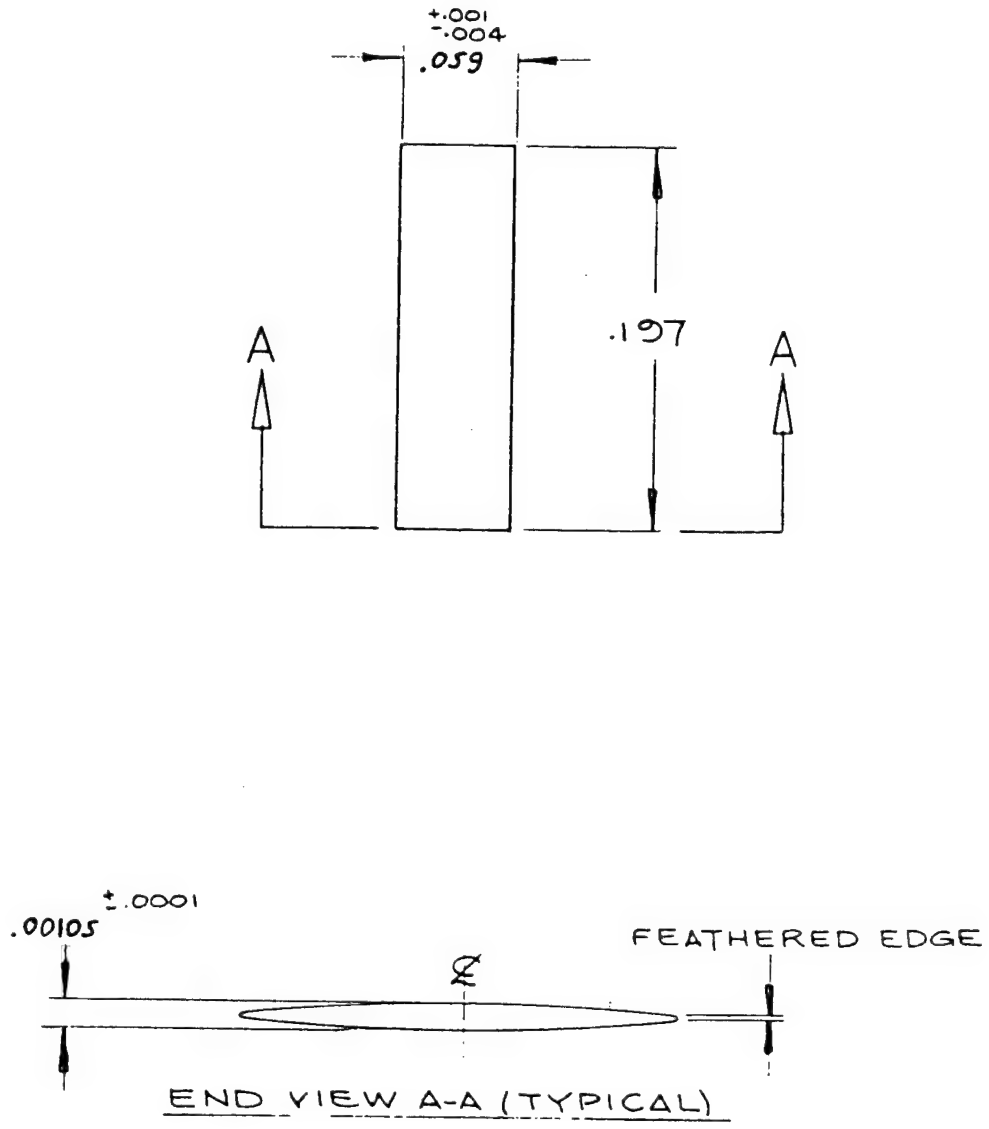

Figure 2-5. Molybdenum Sealing Ribbon

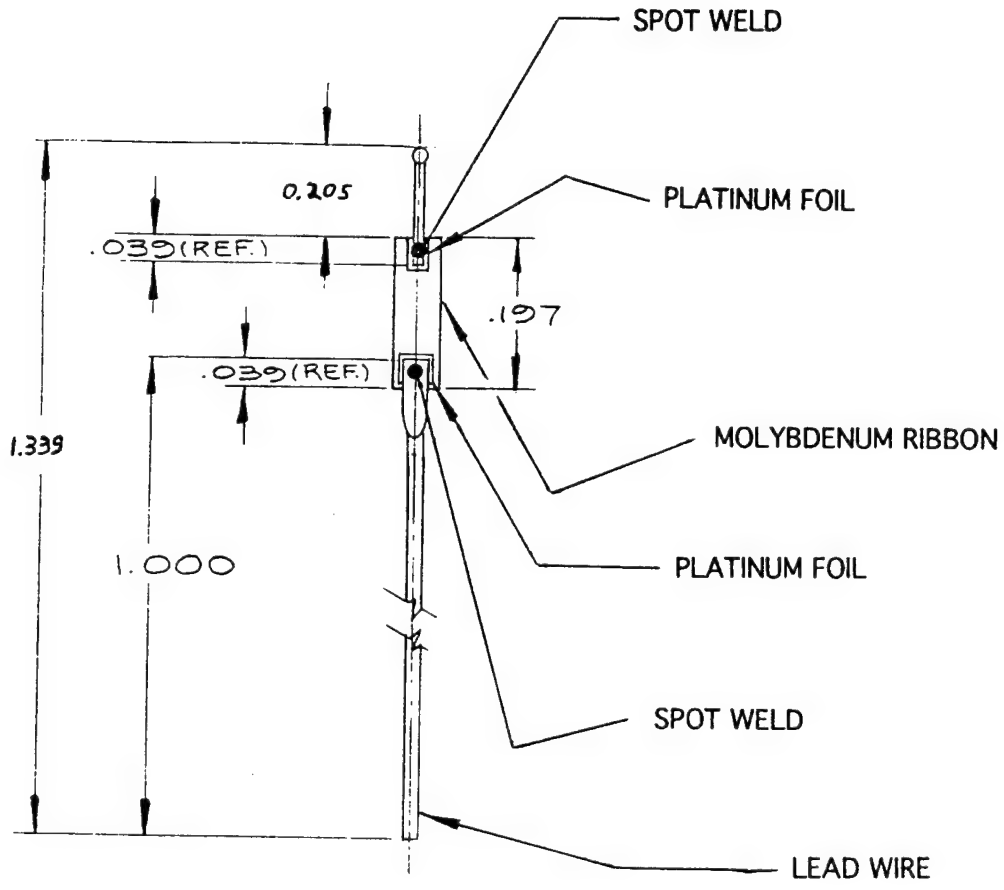

Figure 2-6. Welded Electrode Assembly

2.2 Coil Fabrication

2.2.1 Winding Coil

1. Parts and Materials

    1. 2mm x 4mm quartz tubing, Type 214A.
    2. 2 electrode assemblies per Section 2.1.2
    3. Argon (grade #5.6)
    4. Oxygen, pre-purified Commercial grade
    5. Hydrogen, pre-purified Commercial grade
    6. Helium, pre-purified Commercial grade
    7. Clean high pressure air / nitrogen
    8. Hydrofluoric acid - Fisher 49% Electronic grade
    9. Nitric acid - Fisher Technical grade
    10. Tap water
    11. Distilled water
    12. Methanol - Baker low sodium Electronic grade

2. Tools and Equipment

    1. Heathway glass lathe, Model #BM312L
    2. Lenze coil winding attachment, part #4361228-16005
    3. Graphite mandril per Drawing #A41-527600
    4. 4mm I.D. rubber blow-hose tubing
    5. Torches
    6. Torch holder
    7. Tweezers
    8. Scribes
    9. Reamers
    10. Rulers
    11. Dial calipers
    12. Graphite work bench
    13. Gloves
    14. Quartz / Nonex welding glasses
    15. Centorr high temperature vacuum furnace
    16. Hydrogen furnace
    17. Varian leak tester
    18. Tesla coil
    19. Carborundum glass-cutting saw

3. Procedure

1. Prepare quartz for winding.
    1. Cut 2mm x 4mm quartz tubing into 2' lengths.
    2. Clean with methanol.
    3. Dry using high pressure air / nitrogen.
    4. Heat 5" from end with torch using an oxygen-hydrogen flame.
    5. Bend tubing to form a 90° angle per Figure 2-7.
2. Wind coil.
    1. Install coil winding attachment onto the glass lathe.
    2. Place graphite mandril on glass lathe.
    3. Place quartz in graphite mandril per Figure 2-8.
    4. Heat quartz with hand torch.
    5. Wrap coil 4 turns per Figure 2-9.
    6. Remove from mandril.
    7. Heat with torch at end of fourth coil using an oxygen-hydrogen flame.
    8. Bend outer leg parallel to center leg per Figure 2-10.
    9. Place coil blank back in lathe.
    10. Weld two (2) quartz support struts between the coil legs per Figure 2-11.
3. Attach tubulation.
    1. Connect blow-hose tubing to one leg of the coil.
    2. Heat top of coil hand with hand torch using oxygen-hydrogen flame while blowing gently through the hose until a 3mm hole opens-up.
    3. Butt-seal a 6" length of 2mm x 4mm quartz tubing to top of coil per Figure 2-12.
4. Clean coil blank.
    1. Wash coil blanks with hydrofluoric acid for 4 minutes per Section 2.3.3.
    2. Rinse with distilled water.
    3. Dry using high pressure air / nitrogen.
5. Install electrodes into legs.
    1. Load an electrode assembly into each leg.
    2. Seal off ends of legs below ends of inlead wires.
    3. Place coil on cryo pump.
    4. Pump and flush with argon 4 times.
    5. Pump down to 10^{-6} torr range.
    6. Vacuum seal electrodes into legs using hydrogen-oxygen tipping torch per Figure 2-13.
6. Tip-off tubulation 4" to 6" from the coil per Figure 2-14.
7. Remove coil from pump.
8. Cut off bottom seal on legs using the grinder per Figure 2-15.
9. Acid wash, rinse and dry lamp per Section 2.3.3.
10. Leak test coil blank.
    1. Cut tubulation just below the tip-off using the grinder.
    2. Insert tubulation of coil into test port of leak detector.
    3. Rough pump lamp.
    4. Set machine to TEST mode.
    5. Leak check using helium.
    6. Fire coils in vacuum furnace at 1050°C for 5 hours per Section 2.3.2.

REVISIONS			
REV	DESCRIPTION	BY	DATE

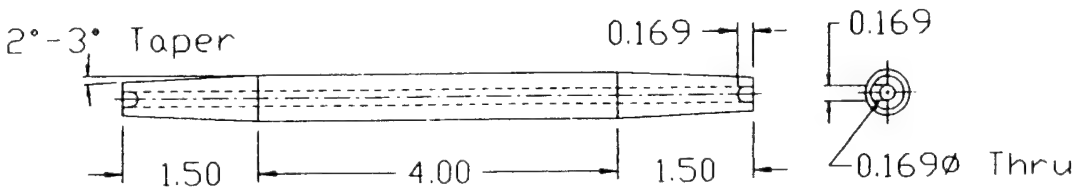

CAD DRAWING
PRINTOUT MAY NOT BE TO SCALE

OSRAM SYLVANIA

TOLERANCES UNLESS OTHERWISE SPECIFIED			
FRACTIONS	DECIMAL	METRIC	ANGLES
± 1/64	.xx ± .010 .xxx ± .005	x ± 0.4 x.x ± 0.25 x.xx ± 0.127	± 0.5°

MATERIAL	20/20 GRAPHITE
TREATMENT	NONE

DRAWN	DATE	CHECKED	SCALE
M.MARCHETERRE	05/02/93	NONE	1:2

ENGINEERING CENTER
60 BOSTON ST., SALEM, MA. 01970

PROJECT	NEW MINOR LIGHT SYSTEM
ASSEMBLY	
PART NAME	MANDRIL
DRAWING NUMBER	A41-527600

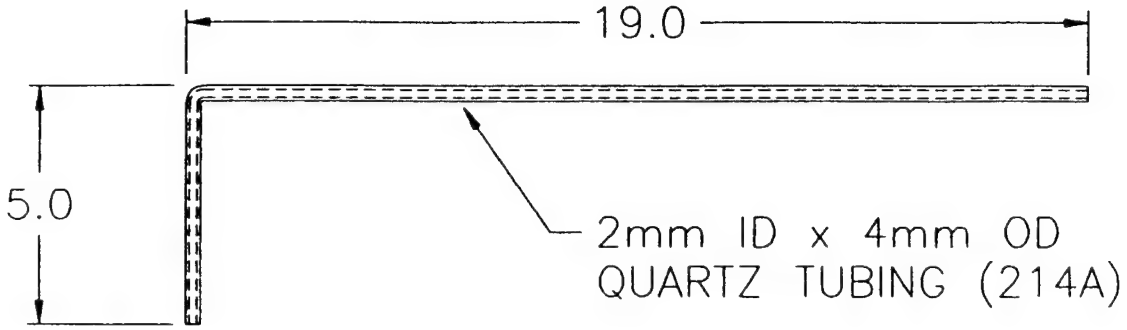

Figure 2-7. Quartz Tubing with 90° Bend

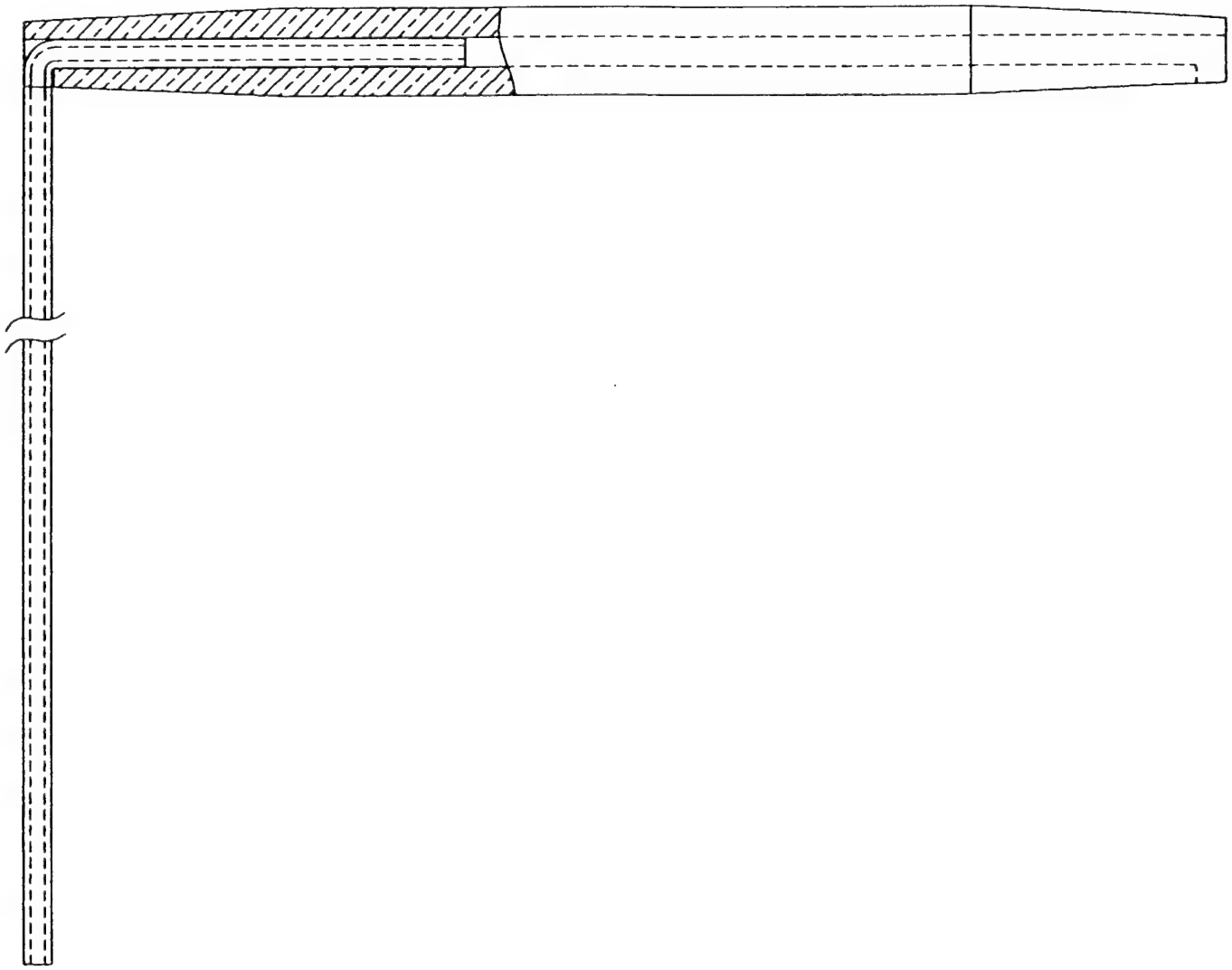

Figure 2-8. Bent Tubing in Mandril

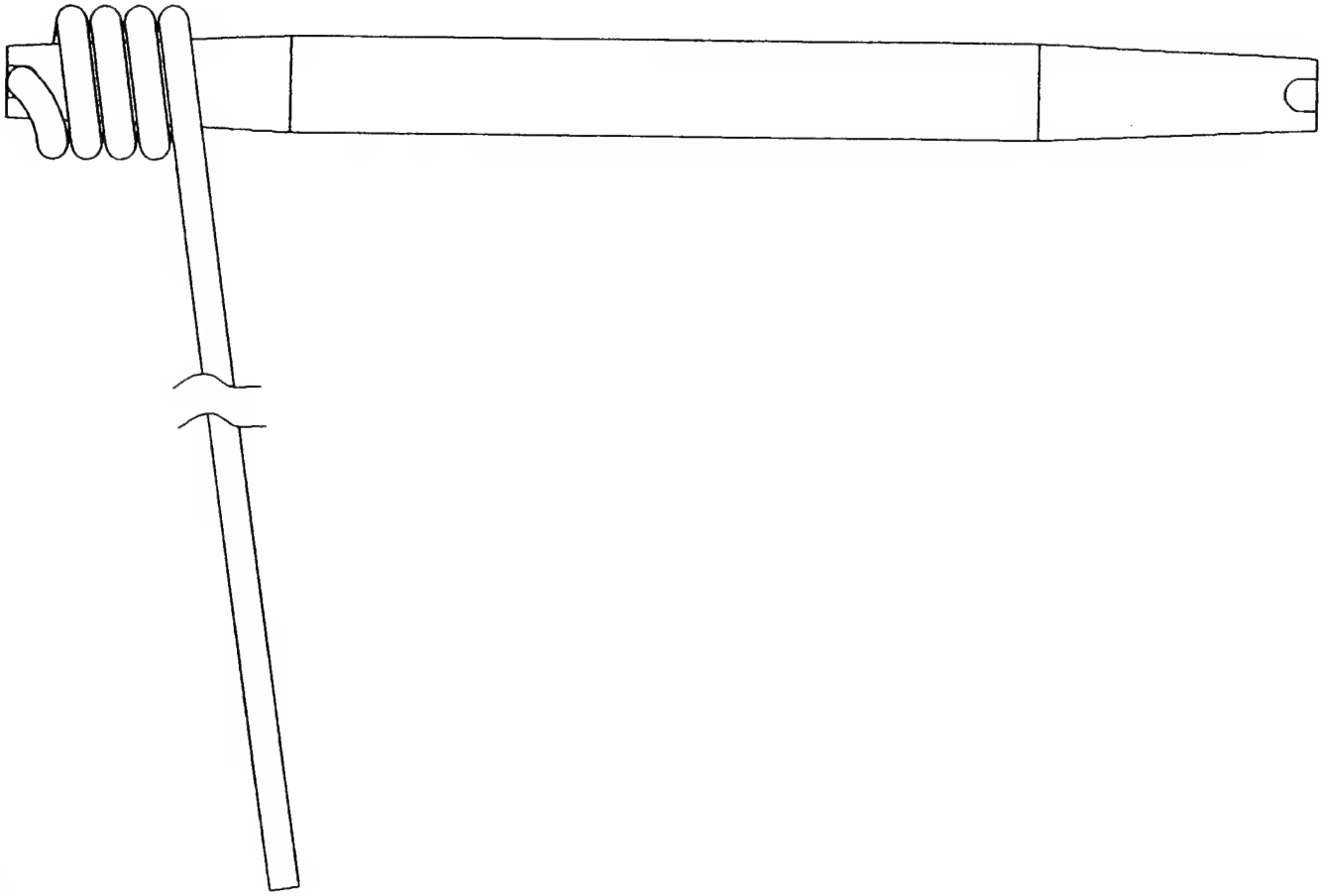

Figure 2-9. Coiled Tubing on Mandril

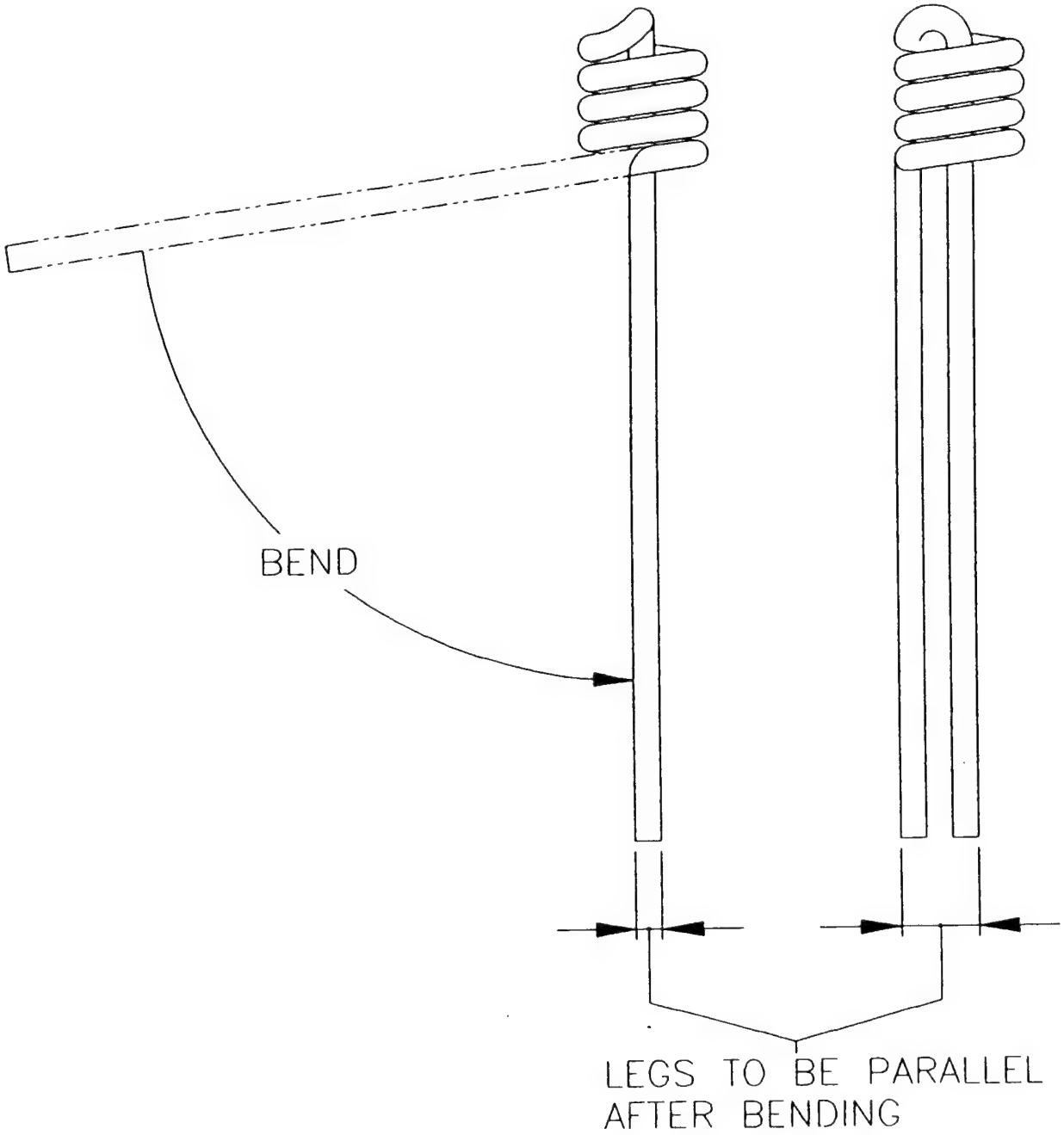

Figure 2-10. Bending Leg on Coil Blank

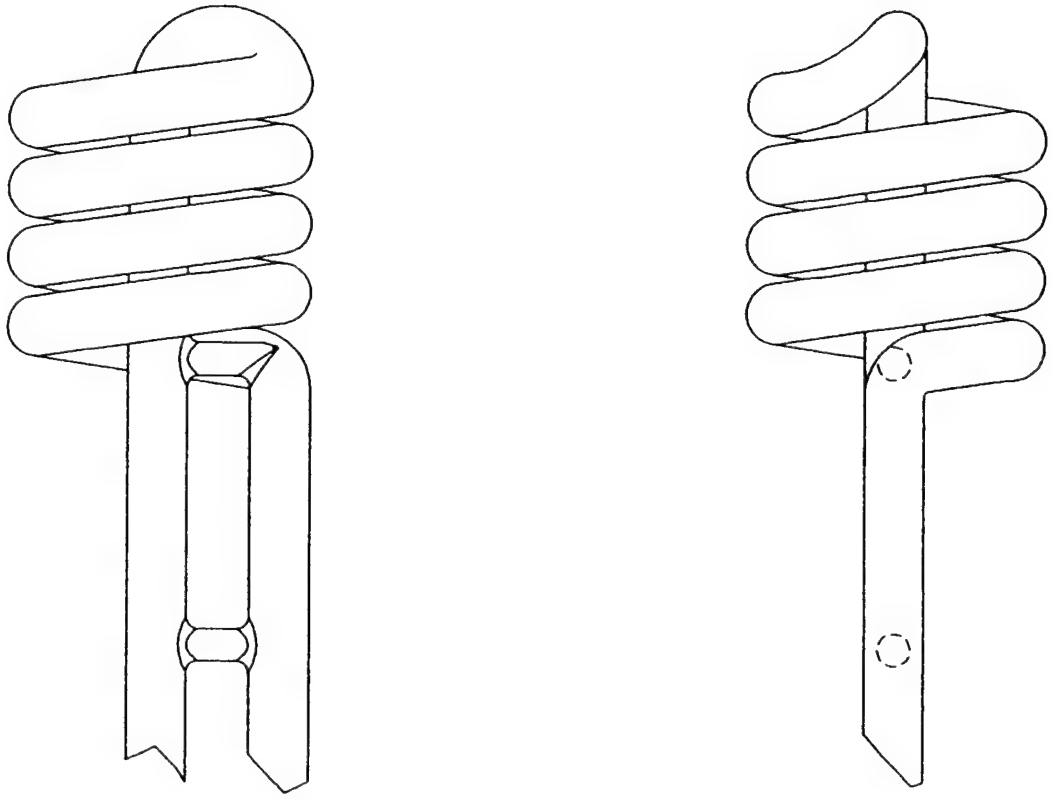

Figure 2-11. Support Struts on Legs of Coil Blank

Figure 2-12. Coil Blank with Tubulation

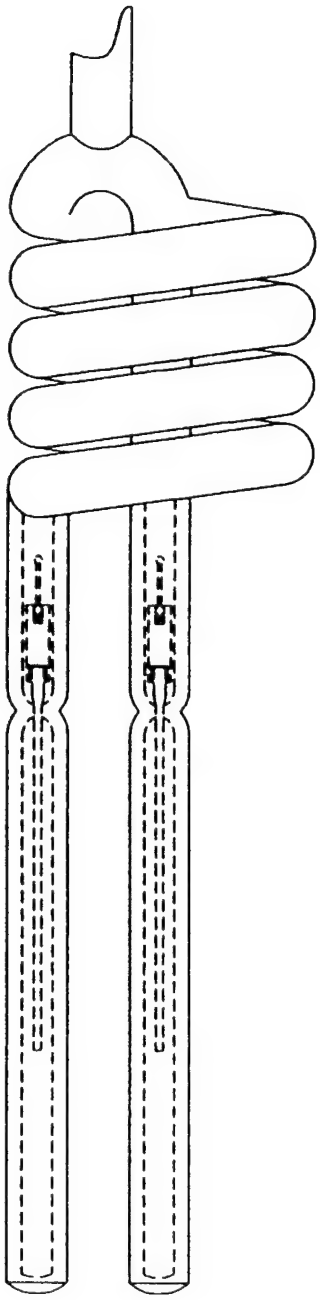

Figure 2-13. Electrodes Vacuum Sealed into Coil Blank

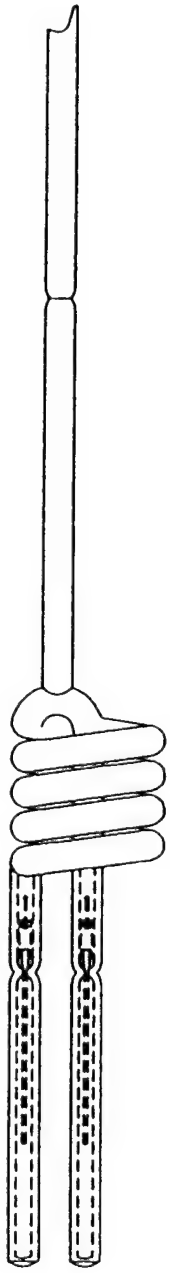

Figure 2-14. Tubulation with Long Tip-Off

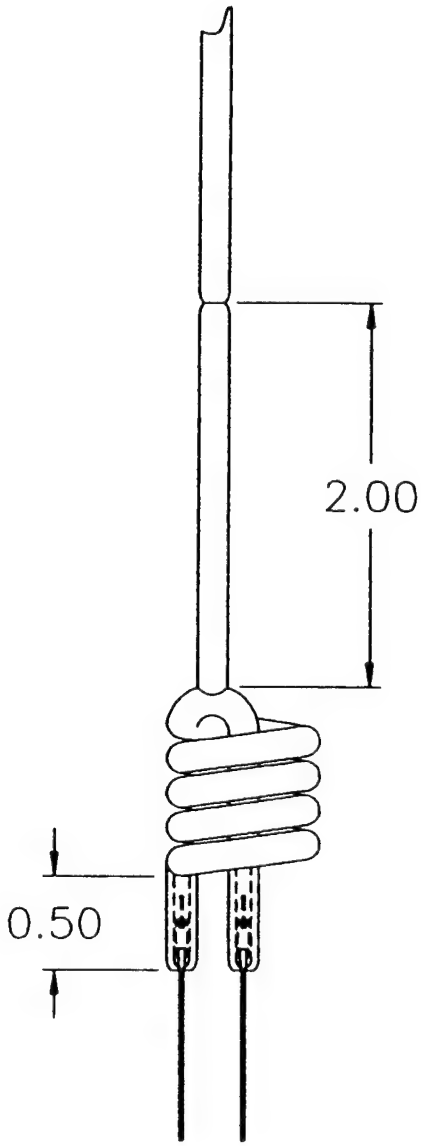

Figure 2-15. Coiled Lamp Blank with Legs Cut to Proper Length

2.2.2 Filling Lamp

1. Parts and Materials

    1. Lamp Coil Blank Assembly per Section 2.2.1
    2. Argon (grade #5.6)
    3. Oxygen, pre-purified Commercial grade
    4. Hydrogen, pre-purified Commercial grade
    5. Hydrofluoric acid - Fisher 49% Electronic grade
    6. Nitric acid - Fisher Technical grade
    7. Mercury, triple distilled
    8. Tap water
    9. Distilled water
    10. Methanol - Baker low sodium Electronic grade

2. Tools and Equipment

    1. VAC Atmospheres argon filled glove box
    2. CTI cryogenic vacuum system
    3. Hand torches
    4. Tweezers
    5. Scribes
    6. Rulers
    7. Dial calipers
    8. Torch holder
    9. Gloves
    10. Quartz / Nonex welding glasses
    11. Hypodermic mercury dispenser syringe calibrated in µl
    12. Tesla coil

3. Procedure

    1. Load lamp blanks into glove box.
    2. Dose lamp with 5 mg (10µl) of mercury
       through the top tubulation using the syringe.
       Note that the mercury does not have to be covering the electrodes at this time.
    3. Remove lamps from glove box.
    4. Load lamps into cryo pump head.
    5. Pump and flush with argon 4 times using the roughing pump mode.
    6. Put system onto high vacuum mode.
    7. Pump-down to low end of 10^{-6} torr range.
    8. Back-fill coil with 40 torr of argon.
    9. Seal tubulation at top of lamp using the hand torch.
    10. Test finished lamp coil per Section 8.3

2.3 Cleaning Processes

2.3.1 Hydrogen Firing

1. Parts and Materials

    1. Electrode assembly per Section 2.1.2
    2. Hydrogen, Commercial grade
    3. Nitrogen, Commercial grade
    4. Tap water

2. Tools and Equipment

    1. Hydrogen belt furnace
    2. Molybdenum "boat"

3. Procedure

    1. Turn-on water flow to jacket of cooling section of furnace.
    2. Set furnace temperature to 1050°C.
    3. Turn-off nitrogen flow to furnace.
    4. Turn-on hydrogen flows.
        1. Turn-on hydrogen to input end of furnace.
        2. Turn-on hydrogen flow through the water bubbler (wet hydrogen) to the back end of the furnace.
        3. Turn-on supplementary dry hydrogen flow to the back end of the furnace.
        4. Adjust the ratio of the dry to wet hydrogen to give a dew point of 72°C (approximately 6 parts dry to 1 part wet).
    5. Set belt speed to give a transit time through the hot section of the oven of 15 minutes.
    6. Run parts through furnace.
        1. Place electrode assemblies into the molybdenum boat.
        2. Place the boat on the belt at the front end of the furnace.
        3. Remove boat from the back end of the furnace after transit is complete.
    7. Turn-on nitrogen flows.
    8. Turn-off hydrogen flows.

Note: It is standard practice to leave the oven hot and cooling jacket running if parts are fired more frequently than once per week.

2.3.2 Vacuum Baking

1. Parts and Materials

    1. Quartz coil blank assembly per Section 2.2.1
    2. Argon grade #5.8
    3. Deionized water

2. Tools and Equipment

    1. Centorr Furnace: Model 16 top loaded vacuum furnace.

        The furnace chamber assembly consists of a double wall, all stainless steel water jacketed chamber, inside of which is a cylindrical heat zone. The heat zone is resistance heated. The heating element is made from refractory metal. Heat shield consists of concentric layers of refractory metal sheets.

        Furnace temperature is controlled by closed-loop circuit between the temperature sensor, the control instrument and the power supply.

        System protection is provided by water-flow interlock.

    2. Cotton gloves

3. Procedure

General: System is always kept under vacuum.
Operating temperature: 1050°C for 6 hours.

1. Check ion gauge - turn-off.
2. Push "STOP" button of vacuum cycle.
3. Loosen locking screws on top of chamber.
4. Open argon tank - turn butterfly valve and check flow meter.
5. Turn gas valve on control panel to "OPEN".
6. Observe rough vacuum gauge on top of the vessel until vacuum has been displaced.
7. Open top of chamber and remove molybdenum cover.
8. Load quartz tubing into tungsten basket and replace cover.
9. Tighten screws on chamber lid.
   Make sure ring is properly seated.
10. Close butterfly valve and argon tank.
11. Close blue gas valve and argon tank.
12. Push "START" button for vacuum cycle.
    During roughing cycle re-tighten screws.
13. When high vacuum, turn ion gauge back on.
14. When ion gauge is below 10^{-5} torr, check water flow for cooling, check control lamp on panel.
15. Turn on power for the heaters.
16. Fire quartz using the time profile in Table 1.
    The time profile is also shown graphically in Figure 2-16.

Note: When system is down and vacuum vessel is at room temperature, shut the valve on the cooling water line.
Be sure to open this valve again when running the furnace.

Table 1. Time Profile

Segment	Process	Duration	Furnace Set Point
1	Soak	1 sec.	10°C
2	Ramp - T		40°C/min.
3	Soak	3 min.	1000°C
4	Ramp - T		20°C/min.
5	Soak	360 min.	1050°C
6	Ramp - T		999.9°C/min.
7	Soak	1 sec.	10°C

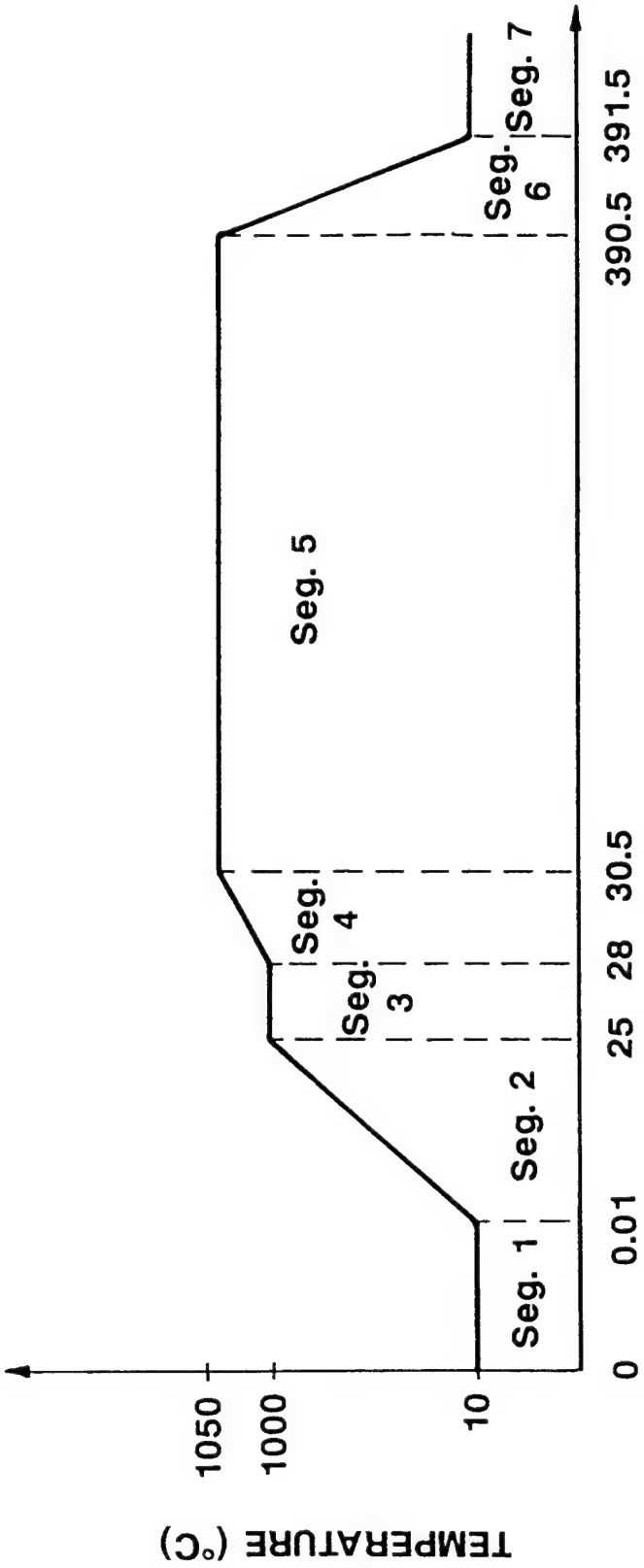

Figure 2-16. Temperature-Time Profile for Vacuum Baking Process

2.3.3 Acid Washing

1. Parts and Materials

    1. Quartz blank assembly per Section 2.2.1
    2. Hydrofluoric acid mixture: 15% (by volume) hydrofluoric acid (HF)
       85% deionized water.
    3. Running tap water
    4. Deionized water

2. Tools and Equipment

    1. Polypropylene basket and container.
    2. Fume hood
    3. Sink
    4. Polycarbonate face shield
    5. Rubber gloves (e.g. PVC, Neoptone)
    6. Eye and Body wash
    7. Coated clothing
    8. Spill control safety apparatus.

3. Procedure

    1. Fill basket with quartz tubing.
    2. Dip basket in HF solution. Leave immersed 5 minutes.
    3. Raise basket and drain excess acid.
    4. Rinse with tap water, rinse 3 to 5 times.
    5. Do final rinse with deionized water for 1 minute.
    6. Dry quartz glass in oven at 120°C for 20 minutes.

3. PHOSPHORING OF LAMPS

3.1 Preparation of Phosphor

3.1.1 Preparation of Polyox Lacquer

1. Parts and Materials

    1. Union Carbide Polyox resin WSRN-300
    2. Deionized water

2. Tools and Equipment

    1. 1 gallon polyethylene tank with high speed mixer (1750 rpm)
    2. Weight scale
    3. Graduated cylinder
    4. Filter press with mesh #325 nylon filtering screen
    5. 500 ml polyethylene bottle with cover

3. Procedure

    1. Add 300 ml of deionized water to 1 gallon tank.
    2. Turn on mixer with shaft positioned to create a vortex.
    3. Slowly add 15.9 g Polyox resin to the deionized water.
    4. After all the Polyox has been added to the tank, leave the mixer on for 2 to 3 hours until the resin is completely dissolved.
    5. Pump the lacquer through the filter press to the storage bottle.
    6. Keep lacquer covered during storage.

3.1.2 Preparation of Alon-C

1. Parts and Materials

    1. Lovezzola-Ward Company Alon-C
    2. Aluminum Nitrate: $Al(NO_3)_3 \cdot 9H_2O$
    3. Deionized water

2. Tools and Equipment

    1. 1 gallon polyethylene mixing tank
    2. Low speed mixer
    3. Weight scale
    4. Fume hood
    5. Nylon filter screen - 100 mesh
    6. Graduated cylinder
    7. 500 ml polyethylene bottles with cover

3. Procedure

    1. Add 300 ml of deionized water to 1 gallon tank.
    2. Turn on mixer with shaft positioned to create a vortex.
    3. Slowly add 34.2 g Alon-C to the deionized water.
    4. Add 4.1 g aluminum nitrate to tank.
    5. Leave the mixer on for 2 hours
    6. Pour solution into polyethylene bottle and close cover.
    7. Allow mixture to age for 7 days.
    8. Run on roller mill for 5 minutes.
    9. Pour the solution through the filter to the other bottle.

3.1.3 Mixing of Green Phosphor

1. Parts and Materials

    1. Willemite (Zn_2SiO_4:Mn) phosphor - OSI Designation 2285
    2. Polyox lacquer per Section 3.1.1
    3. Alon-C mixture per Section 3.1.2
    4. Hercules Corporation Defoamer 831
    5. Mazer Chemical Corporation Ployol Macol-32
    6. Deionized water

2. Tools and Equipment

    1. Graduated cylinder
    2. 500 ml polyethylene bottle with cover
    3. Weight Scale
    4. Roller mill

3. Procedure

    1. Measure-out 325g of phosphor and put into the bottle.
    2. Add 79 ml deionized water.
    3. Add 43 cc Alon-C solution
    4. Add 29.5 cc Polyox lacquer
    5. Add 0.06 g Defomer 831
    6. Add 0.01 g Ployol Macol-32
    7. Close bottle tightly.
    8. Mix on roller mill for 30 minutes.

3.2 Preparation of Glass Resin Solution

1. Parts and Materials

    1. Owens-Illinois OI650F glass resin flakes
    2. Ethyl-acetate
    3. Isopropyl alcohol

2. Tools and Equipment

    1. Weight scale
    2. 100 ml beaker
    3. Small stainless steel spatula
    4. 100 ml glass bottle with cover
    5. Fume hood

3. Procedure

    1. Place beaker on scale and tare it out.
    2. Weigh-out 5.0 g of glass resin flakes into the beaker.
    3. Slowly add ethyl-acetate until the total weight is 50 g.
    4. Mix with spatula until all of the glass resin has dissolved.
    5. Pour solution into the bottle and seal tightly.
    6. Clean beaker and spatula with the alcohol.

Note: All work with the glass resin solution is to be performed under the fume hood.

3.3 Phosphor Coating and Bake-Out

1. Parts and Materials

    1. Coiled LE/Ar lamp prepared for jacketing per Section 5.4
    2. Green phosphor solution per Section 3.1.3
    3. Glass resin solution per Section 3.2
    4. Isopropyl alcohol
    5. High pressure clean air / nitrogen

2. Tools and Equipment

    1. Roller mill
    2. Small high-temperature refractory oven
    3. Fume hood
    4. Heat gun
    5. Tongs
    6. Window screen cut to fit into oven and bent down along the sides (about 1/4")
    7. Small atomizer spray bottle

3. Procedure

    1. Prepare equipment and materials.
        1. Pre-heat oven to 600°C.
        2. Mix phosphor solution on roller mill for 30 minutes.
        3. Pour the glass resin solution into the atomizer bottle.
        4. Prime the sprayer by pumping it until it produces a fine spray without large droplets.
    2. Dip lamp into phosphor.
        1. Holding lamp up-side-down, dip it into the bottle of phosphor solution until it is covered just to the electrodes.
        2. Remove lamp from phosphor solution.
        3. Hold the lamp over the bottle and allow the excess phosphor solution to drip off until it has stopped dripping.
        4. Turn on the heat gun on the heater mode.
        5. Continuing to hold the lamp up-side-down, place it just in front of the heat gun and slowly rotate it until the phosphor is completely dry.
        6. Place the lamp on the screen, being careful not to touch the phosphor as it flakes-off easily at this point.
    3. Apply glass resin solution to lamp.
        1. Holding the lamp by the bottom leads, spray the glass resin solution onto the lamp while rotating it until the phosphor is completely wetted. Five (5) sprays should be sufficient.
        2. Place the lamp back onto the screen.
        3. Dry the lamp with the heat gun on heater mode for 5 minutes to drive off the volatile components.
    4. Bake-out lamp.
        1. Remove the phosphor from the beaded lead on the top support assembly.
        2. Place the lamp into the oven.
        3. Bake-out for 5 minutes.
        4. Remove lamp from oven and allow to cool.
    5. Clean-out atomizer bottle.
        1. Pour remaining glass resin solution back into the storage bottle and close it tightly.
        2. Pour some alcohol into the atomizer bottle.
        3. Close the atomizer bottle and shake it up.
        4. Pump the bottle, spraying the alcohol into an organic waste storage bottle.
        5. Pour any remaining alcohol into the waste storage bottle.
        6. Completely disassemble spray bottle.
        7. Clear out each part with the high pressure air / nitrogen.
    6. Test lamp per Section 8.3.

Note: All work with the glass resin solution is to be performed under a fume hood.

4. NEON LAMP FABRICATION

4.1 Electrode Assembly

4.1.1 Electrode

1. Parts and Materials

    1. Osram Sylvania 0.020" diameter MH-83 molybdenum rod 1.25" long
    2. Osram Sylvania Triple-coil schedule D-3521 tungsten filament
       with the tertiary pin not to exceed 0.017"
       with overall length of finished coil 0.250-0.300"
    3. Osram Sylvania $Ba(CO_3)_2$ cathode coating solution, type 5.2 NS (green)

2. Tools and Equipment

    1. Hydrogen furnace
    2. Roller mill
    3. Molybdenum "boat"
    4. Glass jar with cover
    5. Tweezers

3. Procedure

    1. Mix jar of coating solution on roller mill.
    2. Slide the triple-coil over the end of the molybdenum rod,
       keeping the coils equally spaced per Figure 4-1.
    3. Dip the coil into coating solution.
    4. Lift the electrode and hold it horizontal while spinning it slowly in air
       to allow the coating to dry evenly.
    5. Repeat step 3 and 4 for a second coating.
    6. Let the green electrodes set for 1/2 hour, held vertically
       before further processing.
    7. Fire electrode.
        1. Place electrodes into the molybdenum boat and fire in hydrogen
           at 1650°C for 5 minutes.
        2. Pack the electrodes into a glass jar filled with nitrogen or argon
           for storage.
           Note: Do not let the electrodes sit out in air for a long period of time.

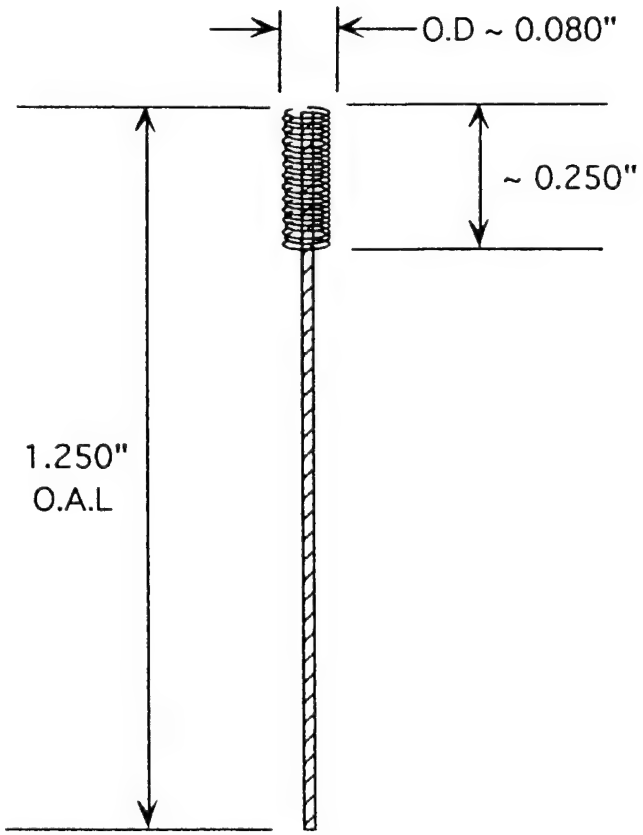

Figure 4-1. Electrode for Neon Lamp

4.1.2 Welding Assembly

1. Parts and Materials

    1. Tungsten rod with coated coil per Section 4.1.1
    2. 0.020" molybdenum wire, type NH-70 per Figure 2-2
       Osram Sylvania part #429282
    3. H. Cross Company 0.059" wide x 0.00105" thick molybdenum foil,
       99.9% grade
    4. Englehard Corporation type 9001 0.040" wide x 0.0016" thick platinum foil,
       99.99% pure

2. Tools and Equipment

    1. Unitek Weldmatic miniature welding head Model #1032B
    2. Unitek 60 watt-seconds welding head Type 101
    3. 1% thoriated welding electrodes per Figure 2-3 (Sect. 2.1.2).
    4. Heavy-duty flat pliers
    5. Scissors or razor blade
    6. Tweezers
    7. Rubber finger cots

3. Procedure

    1. Flatten end of electrode rod with pliers.
    2. Weld end of platinum foil onto the flattened end of the lead wire.
    3. Break-off from rest of ribbon.
    4. Cut molybdenum foil into 0.197" lengths per Figure 2-5 (Sect. 2.1.2).
    5. Weld lead wire to the molybdenum foil using the jig
       per Figure 2-6 (Sect. 2.1.2).
    6. Weld platinum onto flat end of electrode.
    7. Break-off from rest of ribbon.
    8. Weld electrode onto the foil, making sure to keep it aligned with the ribbon.

4.2 Coil Fabrication

4.2.1 Winding Coil

1. Parts and Materials

    1. 2mm x 4mm quartz tubing, Type 214A.
    2. 2 electrode assemblies per Section 4.1.2
    3. Argon (grade #5.6)
    4. Oxygen, pre-purified Commercial grade
    5. Hydrogen, pre-purified Commercial grade
    6. Helium, pre-purified Commercial grade
    7. Clean high pressure air / nitrogen
    8. Hydrofluoric acid - Fisher 49% Electronic grade
    9. Nitric acid - Fisher Technical grade
    10. Tap water
    11. Distilled water
    12. Methanol - Baker low sodium Electronic grade

2. Tools and Equipment

    1. Heathway glass lathe, Model #BM312L
    2. Lenze coil winding attachment, part #4361228-16005
    3. Graphite mandril per Drawing #A41-527600
    4. 4mm I.D. blow-hose tubing
    5. Torches
    6. Torch holder
    7. Tweezers
    8. Scribes
    9. Reamers
    10. Rulers
    11. Dial calipers
    12. Graphite work bench
    13. Gloves
    14. Quartz / Nonex welding glasses
    15. Centorr high temperature vacuum furnace
    16. Hydrogen furnace
    17. Varian leak tester
    18. Tesla coil
    19. Carborundum glass-cutting saw

3. Procedure

    1. Follow procedure per Section 2.2.1

4.2.2 Filling Lamp

1. Parts and Materials

    1. Lamp Coil Blank Assembly per Section 4.2.1
    2. Neon (grade #5.6)
    3. Oxygen, pre-purified Commercial grade
    4. Hydrogen, pre-purified Commercial grade
    5. Hydrofluoric acid - Fisher 49% Electronic grade
    6. Nitric acid - Fisher Technical grade
    7. Tap water
    9. Distilled water
    10. Methanol - Baker low sodium Electronic grade

2. Tools and Equipment

    1. CTI cryogenic vacuum system
    2. Hand torches
    3. Tweezers
    4. Scribes
    5. Rulers
    6. Dial calipers
    7. Torch holder
    8. Gloves
    9. Quartz / Nonex welding glasses
    10. Tesla coil

3. Procedure

    1. Load lamps into cryo pump head.
    2. Pump and flush with neon until the arc is bright red with no purple when stimulated with the Tesla coil.
    3. Pump-down to low end of 10^{-6} torr range.
    4. Back fill coil with 130 torr of neon.
    5. Seal tubulation at top of lamp using the hand torch.
    6. Test finished lamp coil per Section 8.3

5. MOUNTING LAMPS IN OUTER JACKET

5.1 Bottom Legs Assembly

1. Parts and Materials

    1. 0.035" diameter tungsten rod
    2. 0.030" thick x 0.070" wide x 0.100" long nickel ribbon per Figure 5-1
    3. 0.095" O.D. Nonex tube, Corning type 7720
    4. Oxygen, pre-purified Commercial grade
    5. Natural gas, pre-purified Commercial grade
    6. Tap water
    7. Distilled water
    8. Alconox detergent
    9. Methanol - Baker low sodium Electronic grade
    10. Low pressure clean air / nitrogen

2. Tools and Equipment

    1. Heathway glass lathe
    2. Graphite paddle
    3. Torches
    4. Torch holder
    5. Tweezers
    6. Scribes
    7. Rulers
    8. Dial calipers
    9. Gloves
    10. Quartz / Nonex welding glasses
    11. Baldor diamond grinder
    12. Carborundum glass cutting saw
    13. Taylor-Winfield Electric Welder with Robotron Controller Unit

3. Procedure

    1. Cut 0.030" diameter tungsten rod to 1.02" long.
    2. Cut 0.095" O.D. Nonex tubing 0.56" long.
    3. Clean tungsten and Nonex using Alconox in deionized tap water.
    4. Dry.
    5. Mount tungsten in lathe chucks.
    6. Oxidize tungsten using a sharp gas-oxygen flame.
       until the metal is multicolored.
    7. Place Nonex tubing over tungsten rod.
    8. Heat glass with torch using a gas-oxygen flame until it is sealed to the metal
       per Figure 5-1.
    9. Weld the 0.030" x 0.070" nickel ribbon to the rod using the arc welder
       per Figure 5-1.

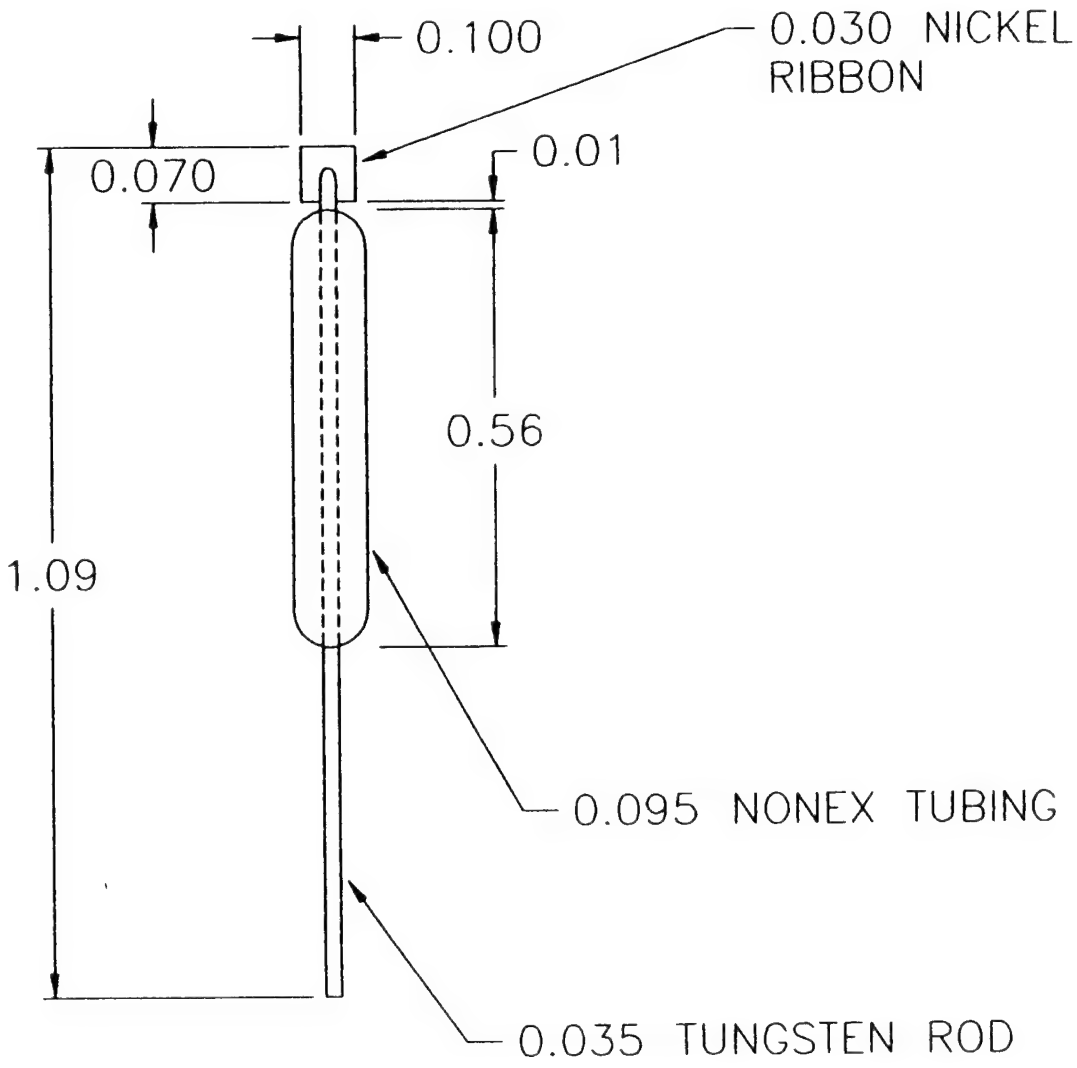

Figure 5-1. Bottom Leg Assembly for Outer Jacket

5.2 Top Support Assembly

1. Parts and Materials

    1. 0.035" diameter tungsten rod
    2. 0.010" thick x 0.060" wide nickel ribbon
    3. 0.095" O.D. Nonex tube, Corning type 7720
    4. Argon, Commercial grade
    5. Oxygen, pre-purified Commercial grade
    6. Natural gas, pre-purified Commercial grade
    7. Clean high pressure air / nitrogen
    8. Alconox detergent
    9. Methanol - Baker low sodium Electronic grade

2. Tools and Equipment

    1. Heathway glass lathe
    2. Graphite paddle
    3. Torches
    4. Torch holder
    5. Tweezers
    6. Scribes
    7. Reamers
    8. Rulers
    9. Dial calipers
    10. Graphite work bench
    11. Gloves
    12. Quartz / Nonex welding glasses
    13. Baldor diamond grinder
    14. Carborundum glass-cutting saw

3. Procedure

Nickel Ribbon Support:

1. Cut nickel ribbon into 3" lengths.
2. Fold in half per Figure 5-2.
3. Press flat and straight.

Top Support Rod:

1. Cut 0.035" diameter tungsten 0.50" long.
2. Cut 0.095" O.D. Nonex tube 0.375" long.
3. Clean tungsten and Nonex using Alconox soap in ionized water.
4. Rinse.
5. Dry tungsten rod.
6. Blow Nonex dry with high pressure air / nitrogen.
7. Mount tungsten in lathe chuck.
8. Oxidize tungsten using a sharp natural gas-oxygen flame until the tungsten turns multicolored.
9. Place Nonex tubing over oxidized tungsten.
10. Heat glass with torch using a gas-oxygen flame until it is sealed to the metal per Figure 5-3.

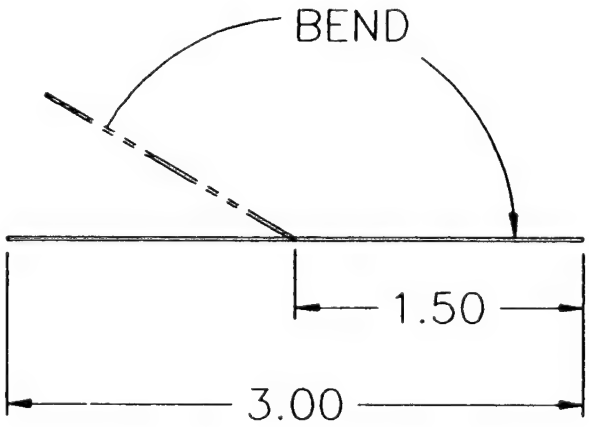

Figure 5-2. Bending of Nickel Ribbon for Top Support Assembly

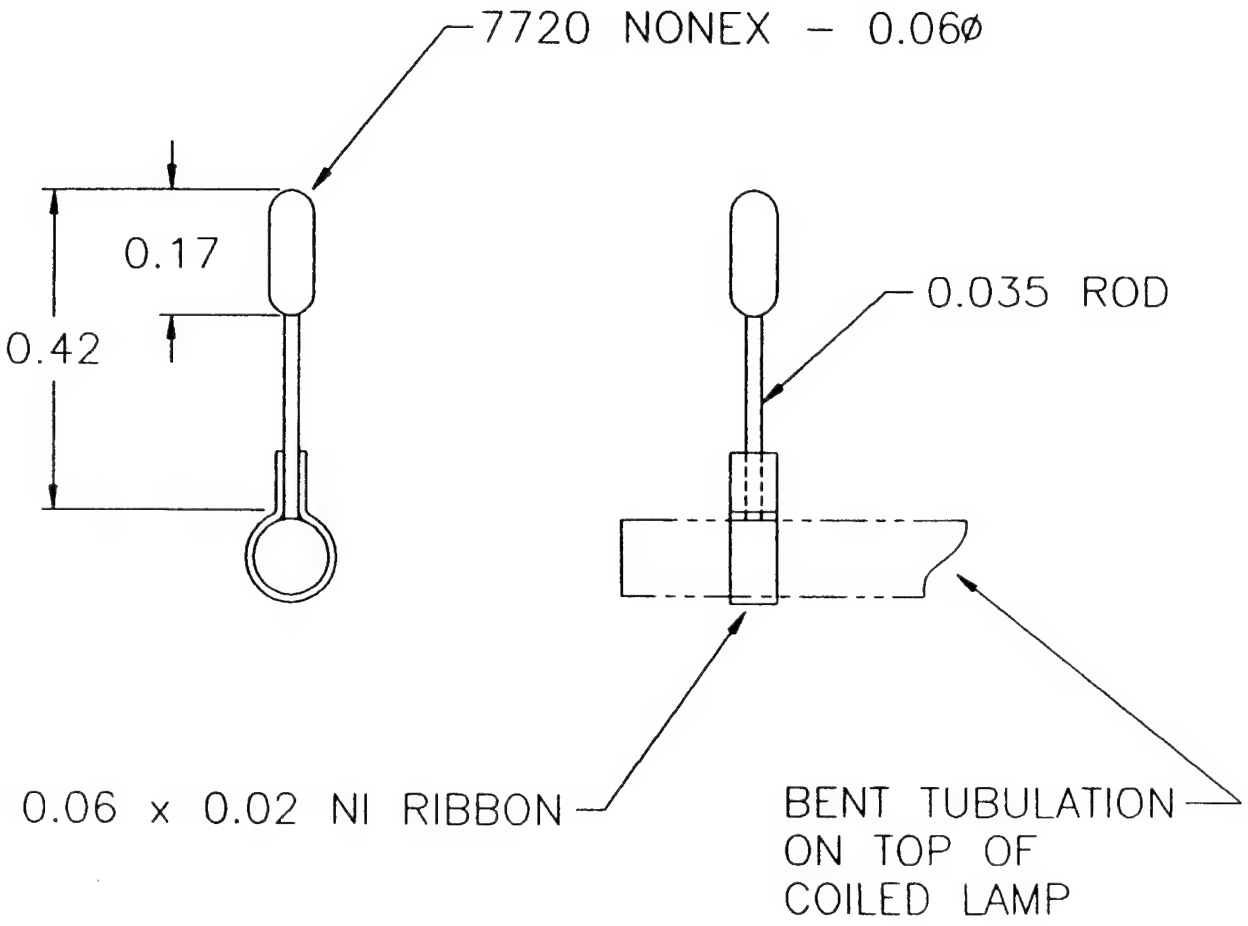

Figure 5-3. Top Support Assembly

5.3 Outer Jacket Pre-Fabrication

1. Parts and Materials

    1. 1.0" O.D. Nonex tube, Corning type 7720
    2. 0.185" O.D. Nonex tube, Corning type 7720
    3. Argon (Commercial grade)
    4. Compressed air / nitrogen, Commercial grade
    5. Oxygen, pre-purified Commercial grade
    6. Natural Gas, pre-purified Commercial grade
    7. Helium, pre-purified Commercial grade
    8. Clean high pressure air / nitrogen
    9. Tap water
    10. Deionized water
    11. Alconox detergent
    12. Methanol - Baker low sodium Electronic grade

2. Tools and Equipment

    1. Heathway glass lathe
    3. Graphite paddle
    4. 4mm I.D. blow-hose tubing
    5. #3 rubber stopper
    6. Torches
    7. Torch holder
    8. Tweezers
    9. Scribes
    10. Reamers
    11. Rulers
    12. Dial calipers
    13. Graphite work bench
    14. Gloves
    15. Quartz / Nonex welding glasses
    16. Vertical jacketing lathe
    17. Nova annealing kiln
    18. Tesla coil
    19. Carborundum glass-cutting saw

3. Procedure

1. Mount glass tubing into lathe.
    1. Cut 1.0" O.D. Nonex into 2' lengths.
    2. Load in headstock of glass lathe.
    3. Load 0.185" O.D. Nonex into tailstock of glass lathe.
    4. Attach blow-hose and stopper on back end of 1" tubing.
    5. Connect other end of blow-hose to a nitrogen regulator set to 2psi.
2. Dome large tube.
3. Tubulate domed end of 1" tube.
    1. Blow hole in top of dome, 0.185" diameter.
    2. Butt-seal Nonex tubes together.
4. Pull-off domed segment of tubing at 3.0".
    1. Heat 1" quartz tubing with torch 3" to 5" from the dome.
    2. Separate tubing at 3.0" from the dome.
5. Repeat steps 1.2 through 4 until Nonex tubing is too short to work with.
6. Cut jacket to 72mm long on glass-cutting saw per Figure 5-4.
7. Clean outer jacket blank.
    1. Wash using Alconox soap in deionized water.
    2. Rinse in tap water, then in deionized water.
    3. Blow dry using high pressure air / nitrogen.
    4. Put in oven 100°C for 5 minutes.

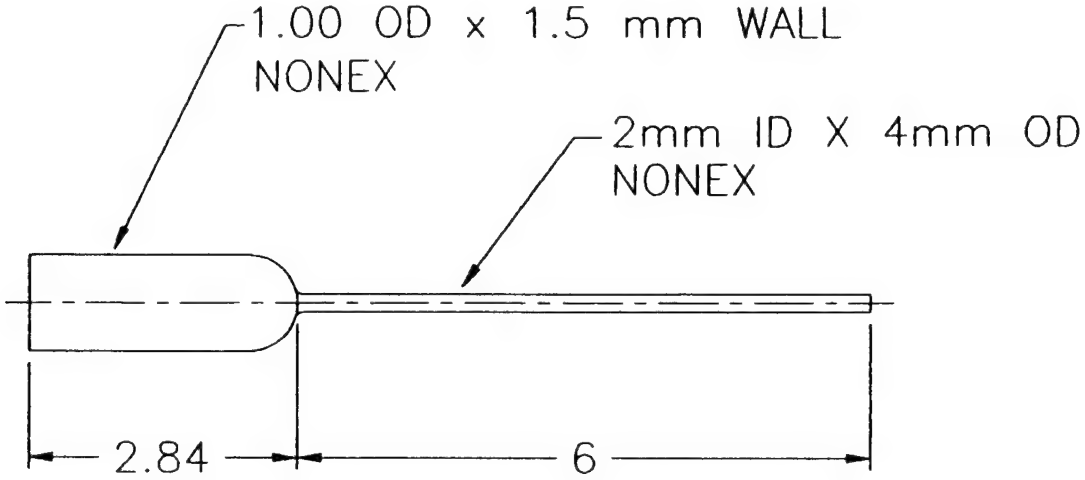

Figure 5-4. Finished Outer Jacket Blank

5.4 Coil Preparation for Jacketing

1. Parts and Materials

    1. Coiled Lamp per Section 2.2 or 4.2
    2. 2 bottom leg assemblies per Section 5.1
    3. Top support assembly per Section 5.2
    4. Argon (grade #5.6)
    5. Oxygen, pre-purified Commercial grade
    6. Hydrogen, pre-purified Commercial grade
    7. Helium, pre-purified Commercial grade
    8. Low pressure clean air / nitrogen
    9. Hydrofluoric acid - Fisher 49% Electronic grade
    10. Nitric acid - Fisher Technical grade
    11. Tap water
    12. Distilled water - Culligan system
    13. Methanol - Baker low sodium Electronic grade

2. Tools and Equipment

    1. Needle-nosed pliers
    2. Torches
    3. Torch holder
    4. Tweezers
    5. Scribes
    6. Reamers
    7. Rulers
    8. Dial calipers
    9. Gloves
    10. Quartz / Nonex welding glasses
    11. Carborundum glass-cutting saw
    12. Taylor-Winfield Electric Welder with Robotron Controller Unit

3. Procedure

    1. Bend top tip-off per Figure 5-5.
    2. Weld the beaded top rod assembly between the nickel ribbon per Figure 5-3. using the arc welder with 50 SCFH of cooling air.
    3. Cut coiled lamp inlead wires to 1mm long.
    4. Weld the nickel ribbon on the bottom leg assemblies to the coiled lamp inlead wires per Drawing #161505-07.

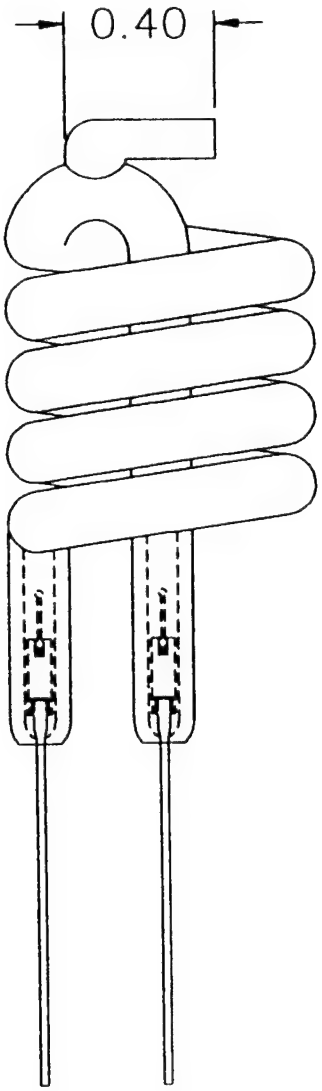

Figure 5-5. Coiled Lamp with Bent Tip-Off

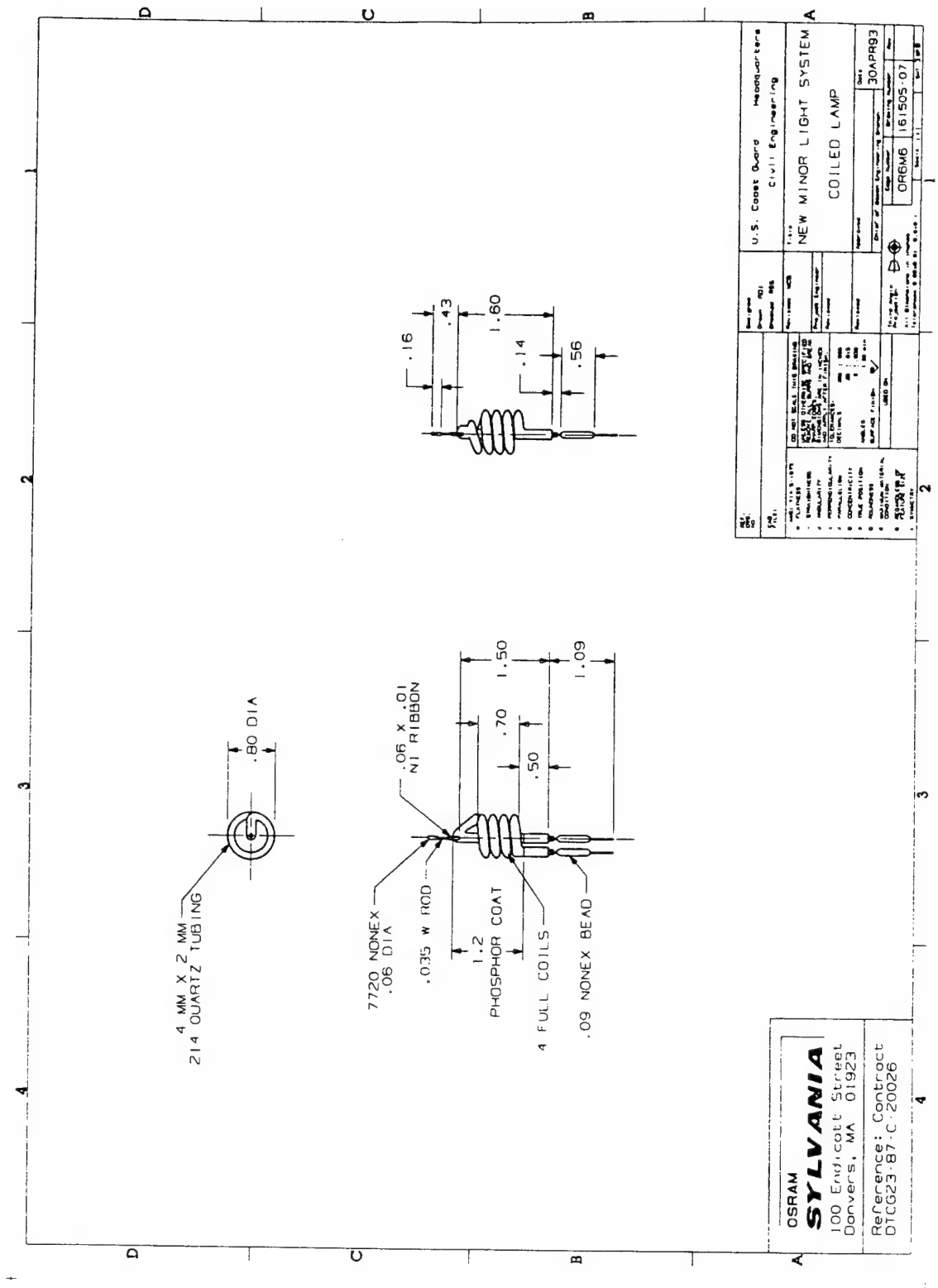

Drawing #161505-07. Coiled Lamp

5.5 Sealing Coil Assembly in Outer Jacket

1. Parts and Materials

    1. Prepared coiled lamp assembly per Section 5.4
    2. Outer jacket blank per Section 5.3
    3. Argon (grade #5.6)
    4. Oxygen, pre-purified Commercial grade
    5. Hydrogen, pre-purified Commercial grade
    6. Helium, pre-purified Commercial grade
    7. Dry air, #0.1 Commercial grade
    8. Methanol - Baker low sodium Electronic grade

2. Tools and Equipment

    1. Vertical glass lathe
    2 Oil diffusion / Welch backing and roughing pump vacuum system
    3. Graphite paddle
    4. Press feet per Drawings #A41-527598 and A41-527599
    5. Coil mounting jig per Drawing #A41-527597
    6. Torches
    7. Torch holder
    8. Tweezers
    9. Scribes
    10. Reamers
    11. Rulers
    12. Dial calipers
    13. Gloves
    14. Quartz / Nonex welding glasses
    15. Tesla coil

3. Procedure

    1. Preheat Nova kiln to 350°C - 400°C
    2. Press-seal outer jacket over coiled lamp legs.
        1. Place lamp legs in mounting jig on vertical glass lathe.
        2. Secure outer jacket in top chuck of lathe so that the bottom of the tube is just level with the bottom of the beaded leads.
        3. Heat base of jacket until glass is soft.
        4. Close the press feet onto outer jacket to seal-in lamp per Drawing #161505-01.
    3. Anneal lamp.
        1. After pressing, place each lamp into preheated oven.
        2. When all lamps are pressed and loaded into oven, raise oven temperature to 600°C and shut it off.
        3. Anneal lamps until oven reaches room temperature.
    4. Backfill lamps.
        1. Place lamp / outer jacket assembly on diffusion pump.
        2. Pump and flush outer jacket several times with dry air.
        3. Pump in high vacuum until at 10^{-6} torr.
        4. Back-fill outer jacket with 400 torr of dry compressed air.
        5. Tip-off outer jacket per Drawing #161505-01.
    5. Test finished lamp per Section 8.3

REVISIONS			
REV	DESCRIPTION	BY	DATE

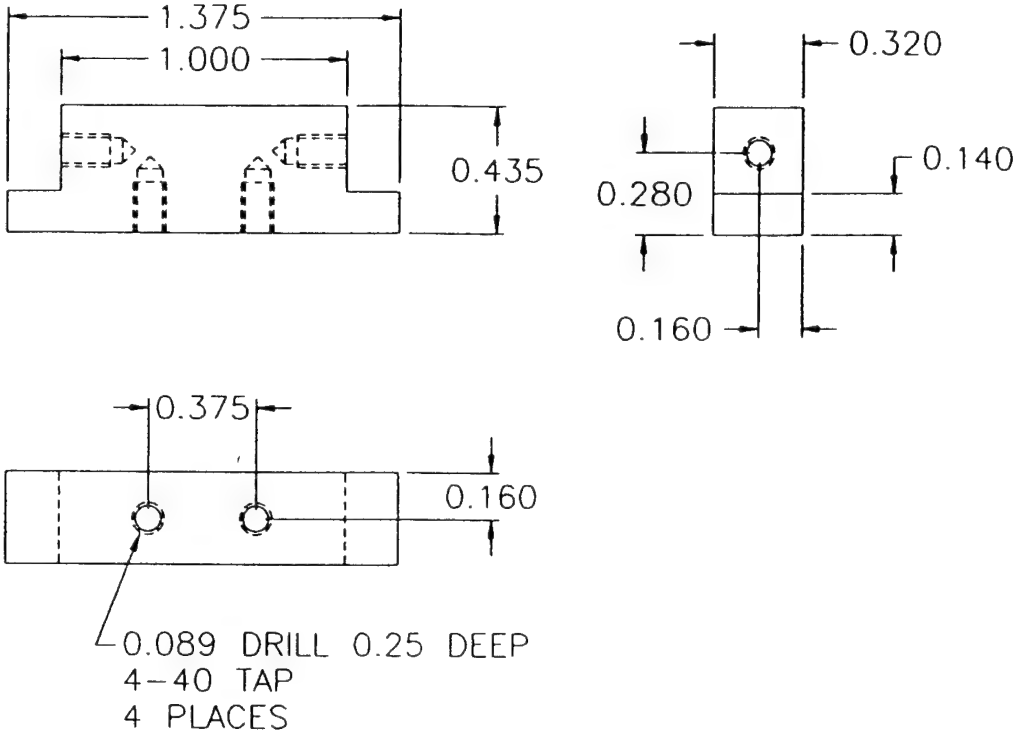

CAD DRAWING
PRINTOUT MAY NOT BE TO SCALE

OSRAM SYLVANIA

TOLERANCES UNLESS OTHERWISE SPECIFIED			
FRACTIONS	DECIMAL	METRIC	ANGLES
± 1/64	.xx ± .010 .xxx ± .005	x ± 0.4 x.x ± 0.25 x.xx ± 0.127	± 0.5°

ENGINEERING CENTER
60 BOSTON ST., SALEM, MA. 01970

MATERIAL	BRASS
TREATMENT	NONE
PROJECT	NEW MINOR LIGHT SYSTEM
ASSEMBLY	
PART NAME	PRESS FEET
DRAWING NUMBER	A41-527598

DRAWN	DATE	CHECKED	SCALE
M.MARCHETERRE	05/02/93	NONE	2:1

REVISIONS			
REV	DESCRIPTION	BY	DATE

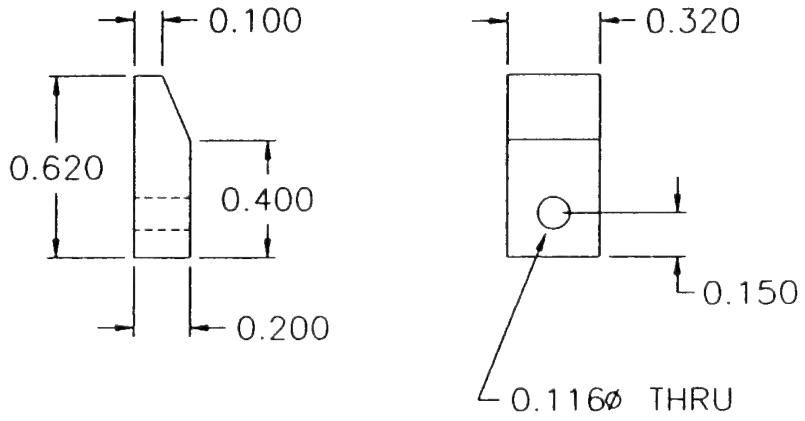

CAD DRAWING
PRINTOUT MAY NOT BE TO SCALE

OSRAM SYLVANIA

TOLERANCES UNLESS OTHERWISE SPECIFIED			
FRACTIONS	DECIMAL	METRIC	ANGLES
± 1/64	.xx ± .010 .xxx ± .005	x ± 0.4 x.x ± 0.25 x.xx ± 0.127	± 0.5°

ENGINEERING CENTER
60 BOSTON ST., SALEM, MA. 01970

MATERIAL	BRASS
TREATMENT	NONE
PROJECT	NEW MINOR LIGHT SYSTEM
ASSEMBLY	
PART NAME	PRESS FEET SIDE PLATES
DRAWING NUMBER	A41-527599

DRAWN	DATE	CHECKED	SCALE
M.MARCHETERRE	05/02/93	NONE	2:1

REVISIONS			
REV	DESCRIPTION	BY	DATE

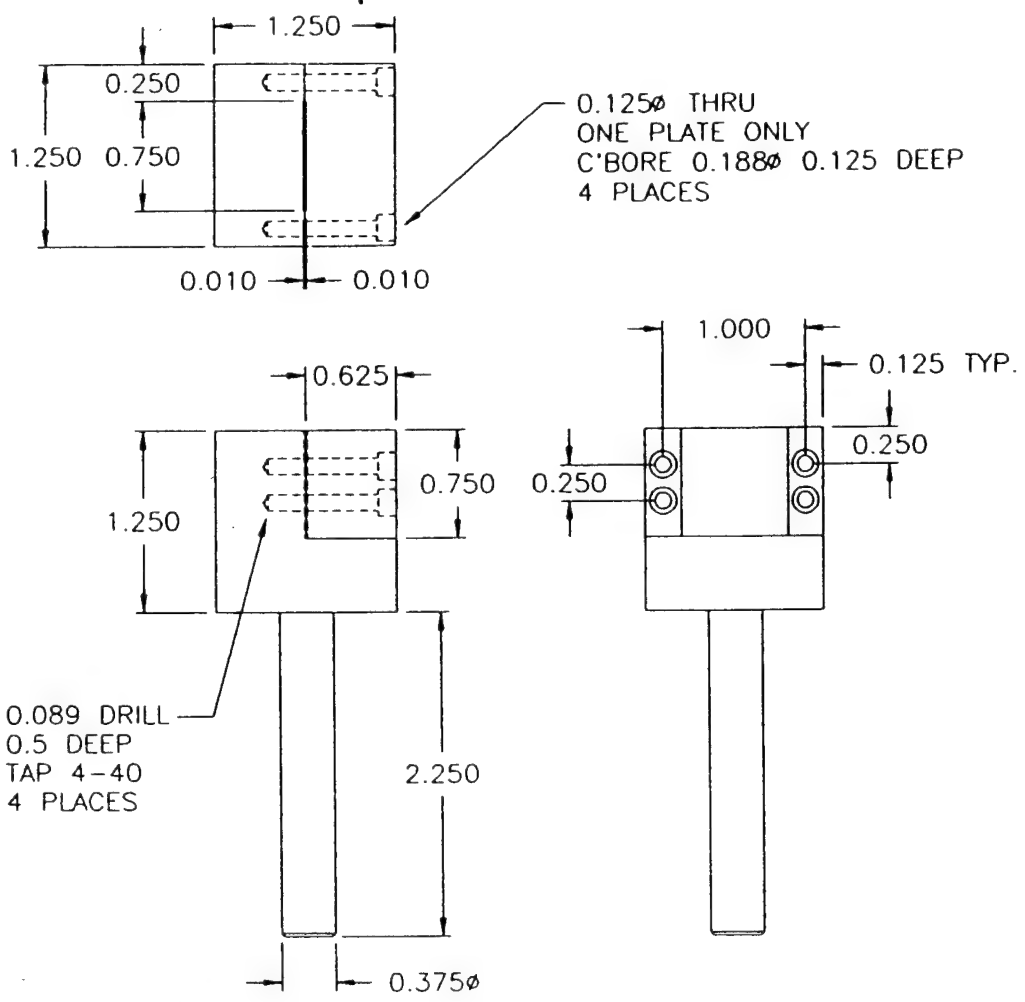

CAD DRAWING
PRINTOUT MAY NOT BE TO SCALE

OSRAM SYLVANIA

TOLERANCES UNLESS OTHERWISE SPECIFIED			
FRACTIONS	DECIMAL	METRIC	ANGLES
± 1/64	.xx ± .010 .xxx ± .005	x ± 0.4 x.x ± 0.25 x.xx ± 0.127	± 0.5°

MATERIAL: BRASS	ENGINEERING CENTER 60 BOSTON ST., SALEM, MA. 01970
TREATMENT: NONE	PROJECT: NEW MINOR LIGHT SYSTEM
	ASSEMBLY:
	PART NAME: PRESS SEAL JIG
DRAWN: M.MARCHETERRE / DATE: 05/02/93 / CHECKED: NONE / SCALE: FULL	DRAWING NUMBER: A41-527597

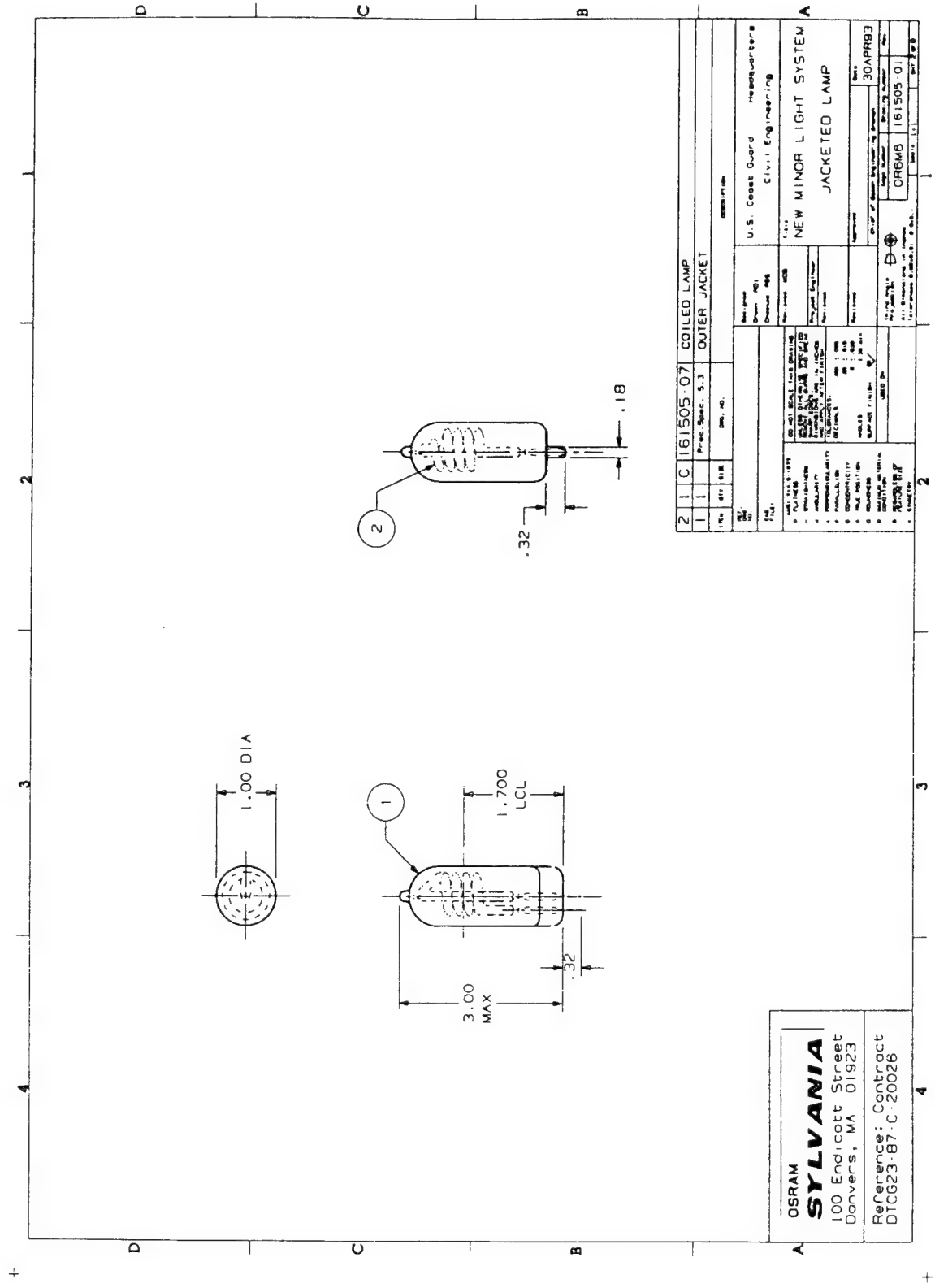

Drawing #161505-01, Jacketed Lamp

6. BASING LAMP

6.1 Lamp Base Assembly

6.1.1 Male Connector

1. Parts and Materials

    1. Solder - Kester SN60PB40, 0.031, QQS571E WRAP 3, 24-6040-0027
    2. Lamp wire - 20AWG 7x#28 tinned copper with 0.010" PVC insulation colored red and black
    3. 9005 lamp connector; OSI 9005 lamp base - 9005 HB3 per OSI Drawing #F44-6A1300-1706 and per Drawing #161505-09

2. Tools and Equipment

    1. Soldering iron
    2. Hacksaw
    3. Wire cutters/strippers
    4. Table vise

3. Procedure

    1. Place 9005 lamp connector into vise and use hacksaw to remove the flange per Drawing 161505-09, leaving the leads undamaged.
    2. Spread the leads out per Drawing #161505-05
    3. Clip leads short to the sides of the plastic base.
    4. Solder on one 8 inch length of pre-tinned lamp wire to each lead.

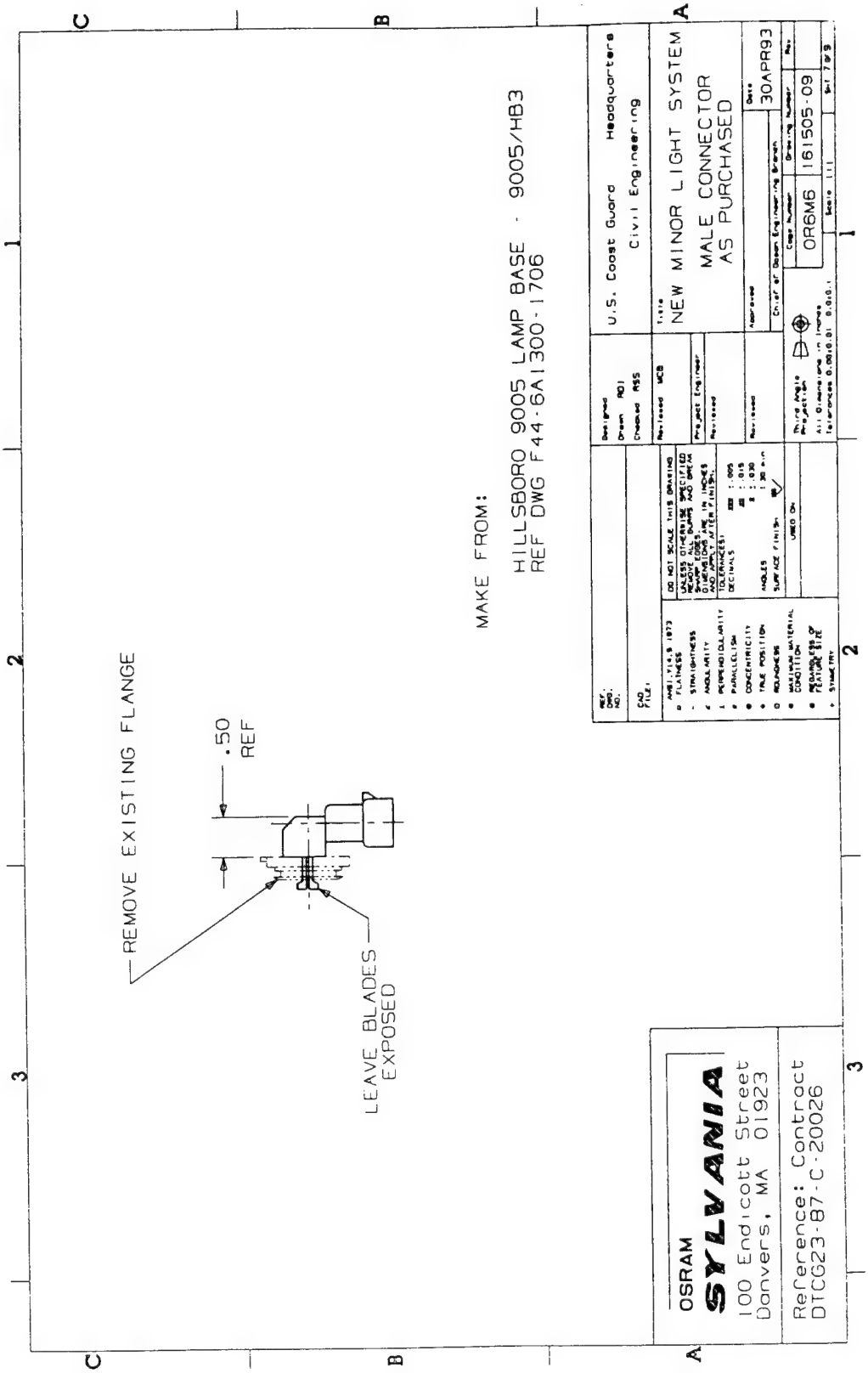

Drawing #161505-09, Male Connector as Purchased

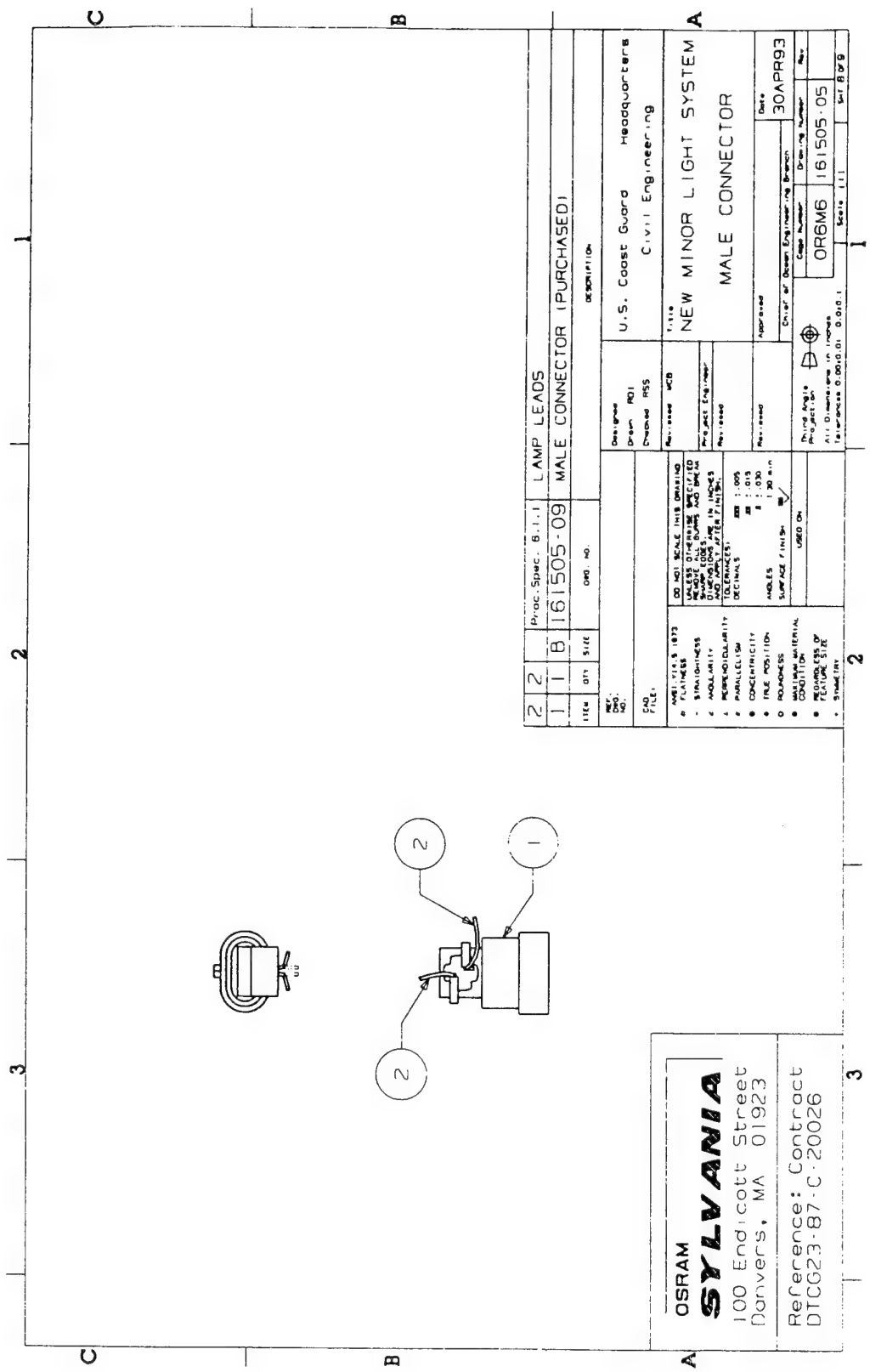

Drawing #161505-05, Male Connector

6.1.2 Assembling Lamp Base

1. Parts and Materials

    1. 5-minute epoxy; GC Electronics "QUIK STIK", Catalog # 10-114,
    2. Emerson & Cuming Uniset Epoxy, #LA-2228-5B-1
    3. OSI Lamp Base per Drawing #161505-04
    4. Male connector per Section 6.1.1

2. Tools and Equipment

    1. Tongue depressors
    2. Pneumatic glue gun (optional)
    3. Air oven - BLUE M "Stabil-Therm", model # OV-490A-3

3. Procedure

    1. Feed the wires through the holes in the bottom of the machined base
    2. Attach the male connector to the bottom of the lamp base using 5 minute epoxy per Drawing #161503.
    3. After the adhesive has set, invert the assembly (connector socket up).
    4. Fill the bottom of the base with the Uniset epoxy. This can be done by using either a tongue depressor or a glue gun.
    5. Place the assembly into an air atmosphere oven at 115°C for about 10 minutes to cure the epoxy.
    6. Cool to room temperature.

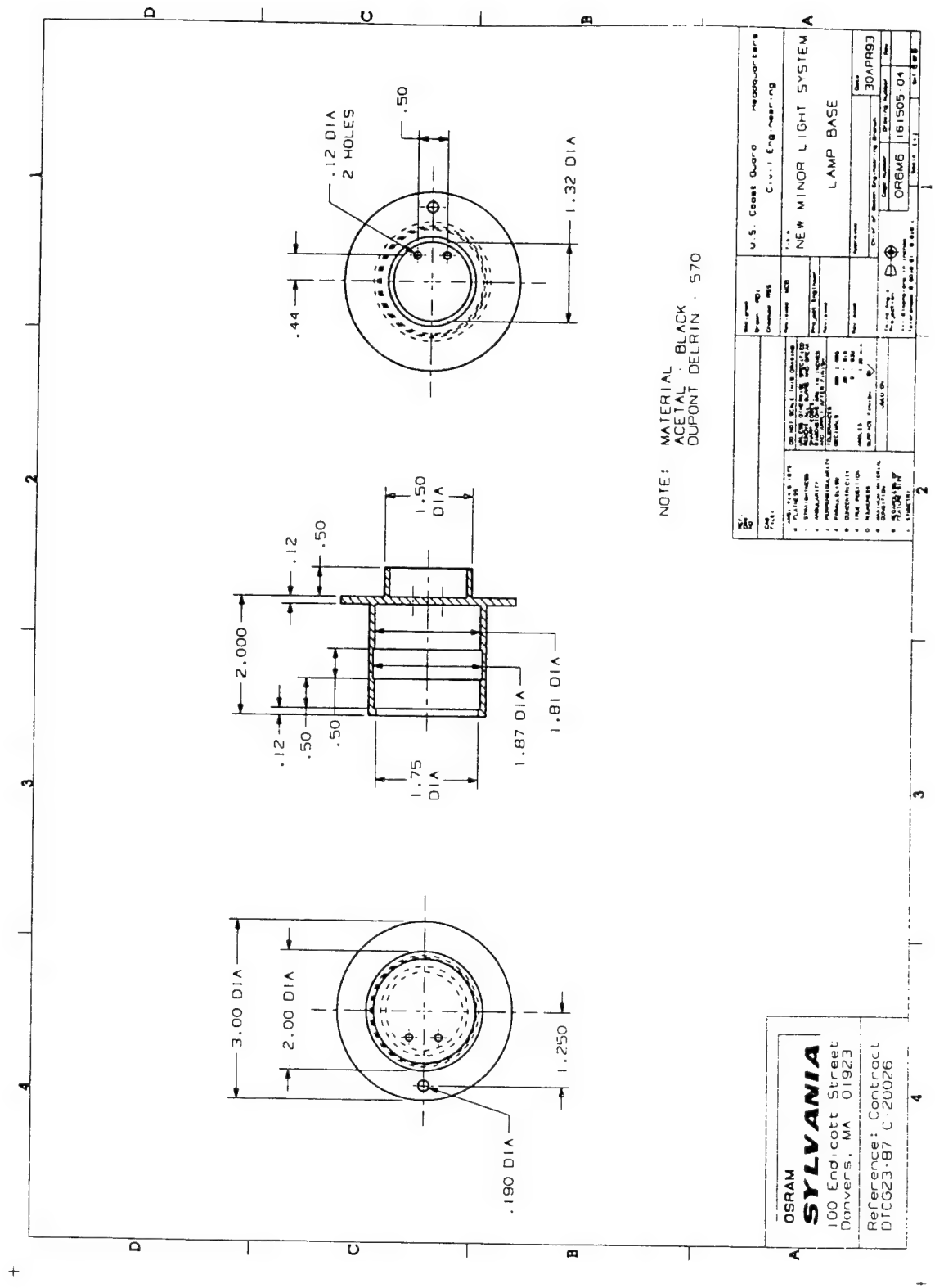

Drawing #161505-04, Lamp Base

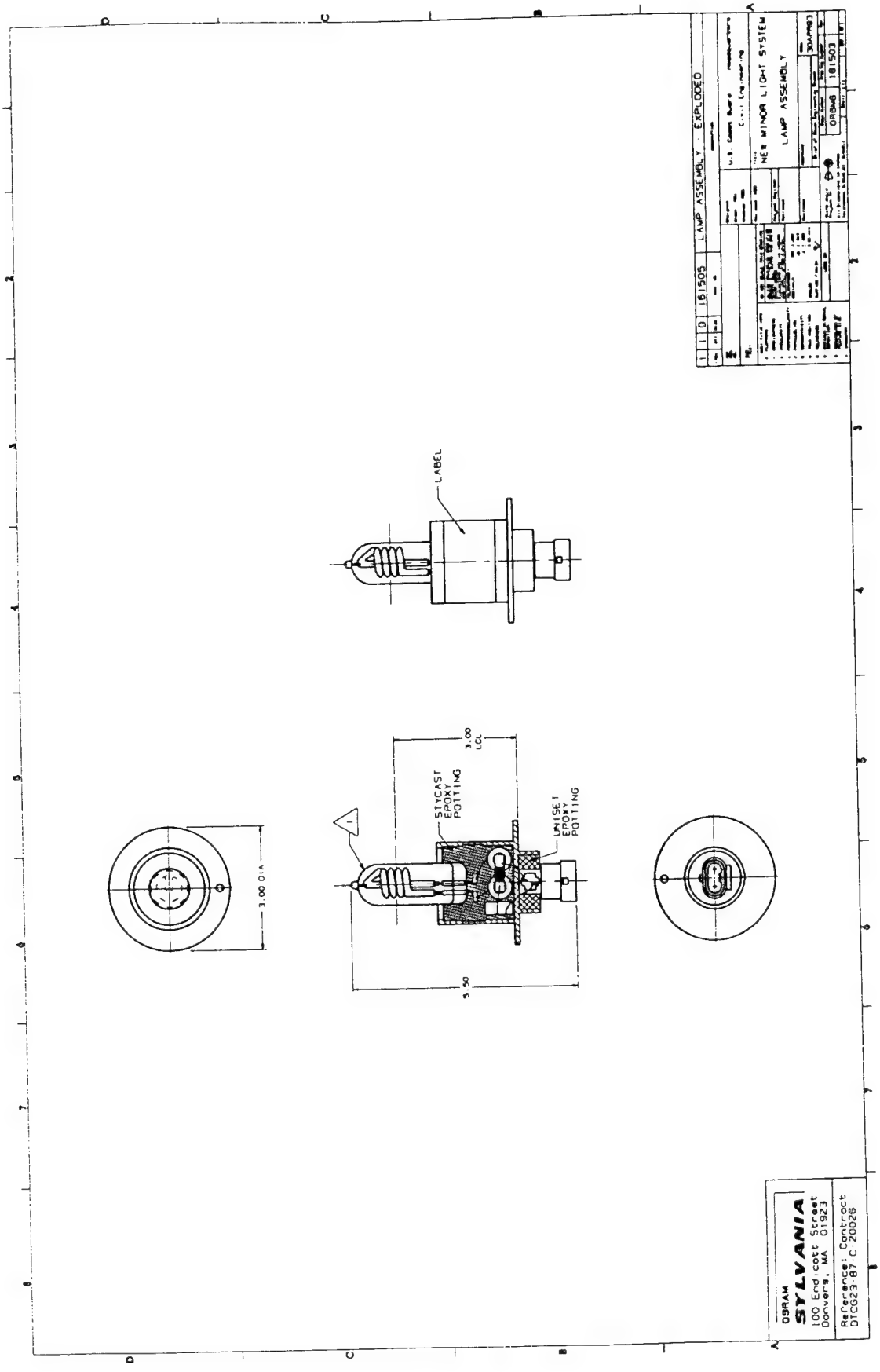

Drawing #161503, Lamp Assembly

6.2 Electrical Components

6.2.1 Lamp Transformer (T2)

1. Parts and Materials

    1. Solder - Kester SN60PB40, 0.031, QQS571E WRAP 3, 24-6040-0027
    2. Lamp wire - 20AWG 7x #28 tinned copper, 0.010" PVC insulation red and black
    3. 5-minute epoxy - GC Electronics "QUIK STIK", Catalog # 10-114
    4. Transformer wire - #24 Heavy Soderon copper wire
    5. Electrical tape - 3M, Scotch Brand, type 8756-3, 1/2" yellow
    6. U core - Fair-Rite Corporation, part #9077024002
    7. Lamp coils - taken from MIYATA transformer, part #TR12KM

2. Tools and Equipment

    1. Soldering iron
    2. Hacksaw
    3. Wire cutters/strippers

3. Procedure

    1. Wrap a turn of electrical tape around each leg of one of the "U" magnetic cores and cut the legs off the other "U" magnetic core.
    2. Wrap 20 turns of transformer wire around the center piece of the taped "U" magnetic core (primary).
    3. Place one lamp coil on to each leg of the core with the lamp leads (outer wires) facing the opposite direction to the primary windings per Drawing #161505-08.
    4. Cut and strip one end of the primary wire close to the core.
    5. Draw out about 1/2 inch of coil wire from the inside of the two coils and strip them.
    6. Tin the ends of the primary wire, the ends of the coil wire and the tip of a 3 inch length of lamp wire.
    7. Solder them together per Drawing #161505-03.
    8. Cut and strip the other end of the primary wire and solder a 3 inch length of lamp wire to it.
    9. Place the transformer assembly on its side and press the soldered coil wires close to the core, away from the outer edge of the coil.
    10. Mix up 2-3 ml of 5-minute epoxy.
    11. Cover the solder connections with some excess placed over the exposed coil wire to keep it away from the edge of the coil.
    12. After the epoxy sets, mix another batch and apply some on the inside of the coils to hold them in place
    13. Connect the top "I" bar piece of the core to complete the magnetic circuit of the assembly.
    14. It is advisable to orient the coils so that the lamp wires are on the opposite side of the transformer to the primary solder joints and within about 1 inch of one another.

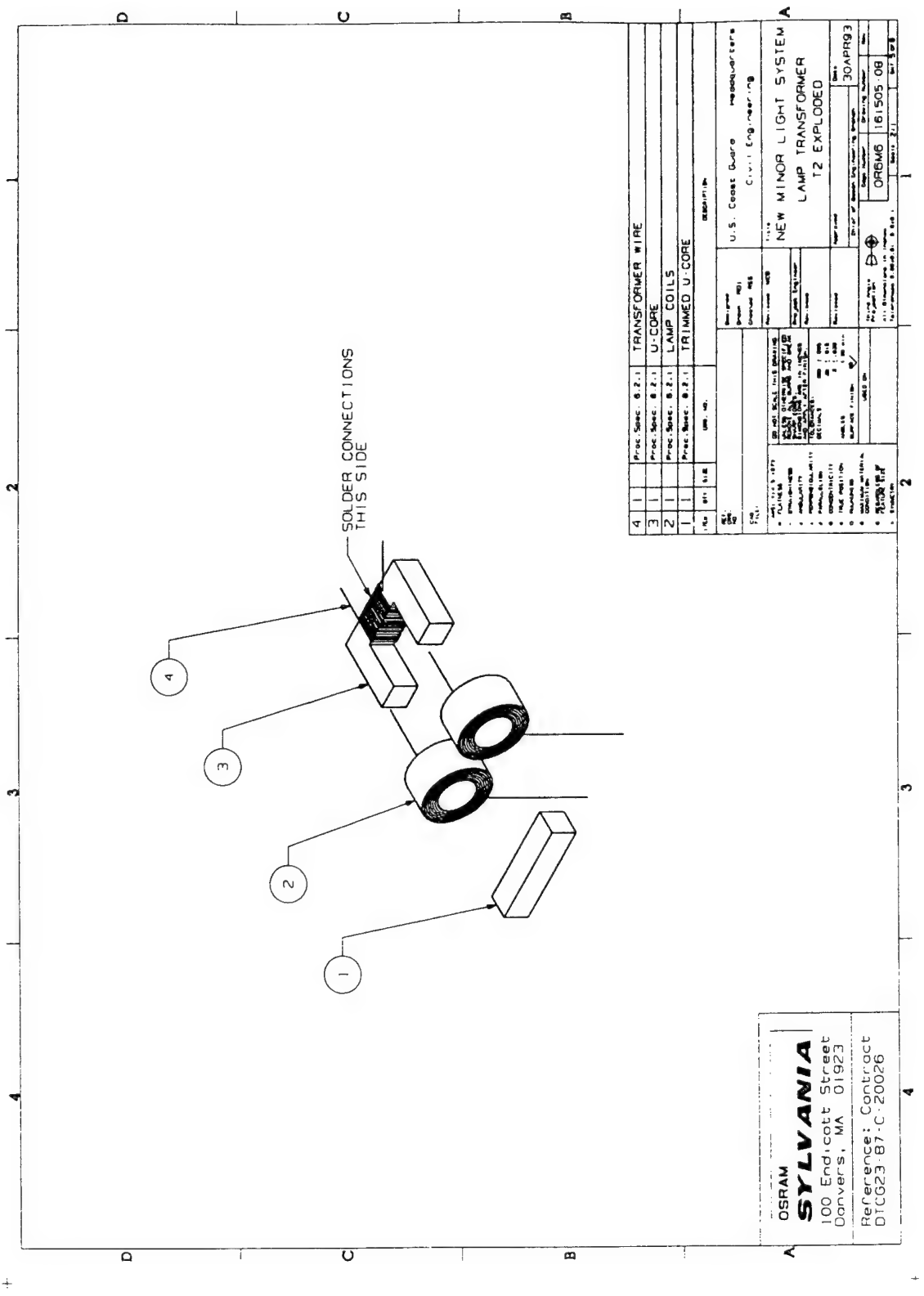
SOLDER CONNECTIONS
THIS SIDE
4
3
2
1
TRANSFORMER WIRE
U-CORE
LAMP COILS
TRIMMED U-CORE
U.S. Coast Guard
NEW MINOR LIGHT SYSTEM
LAMP TRANSFORMER
T2 EXPLODED
OSRAM
SYLVANIA
100 Endicott Street
Danvers, MA 01923
Reference: Contract
DTCG23-87-C-20026

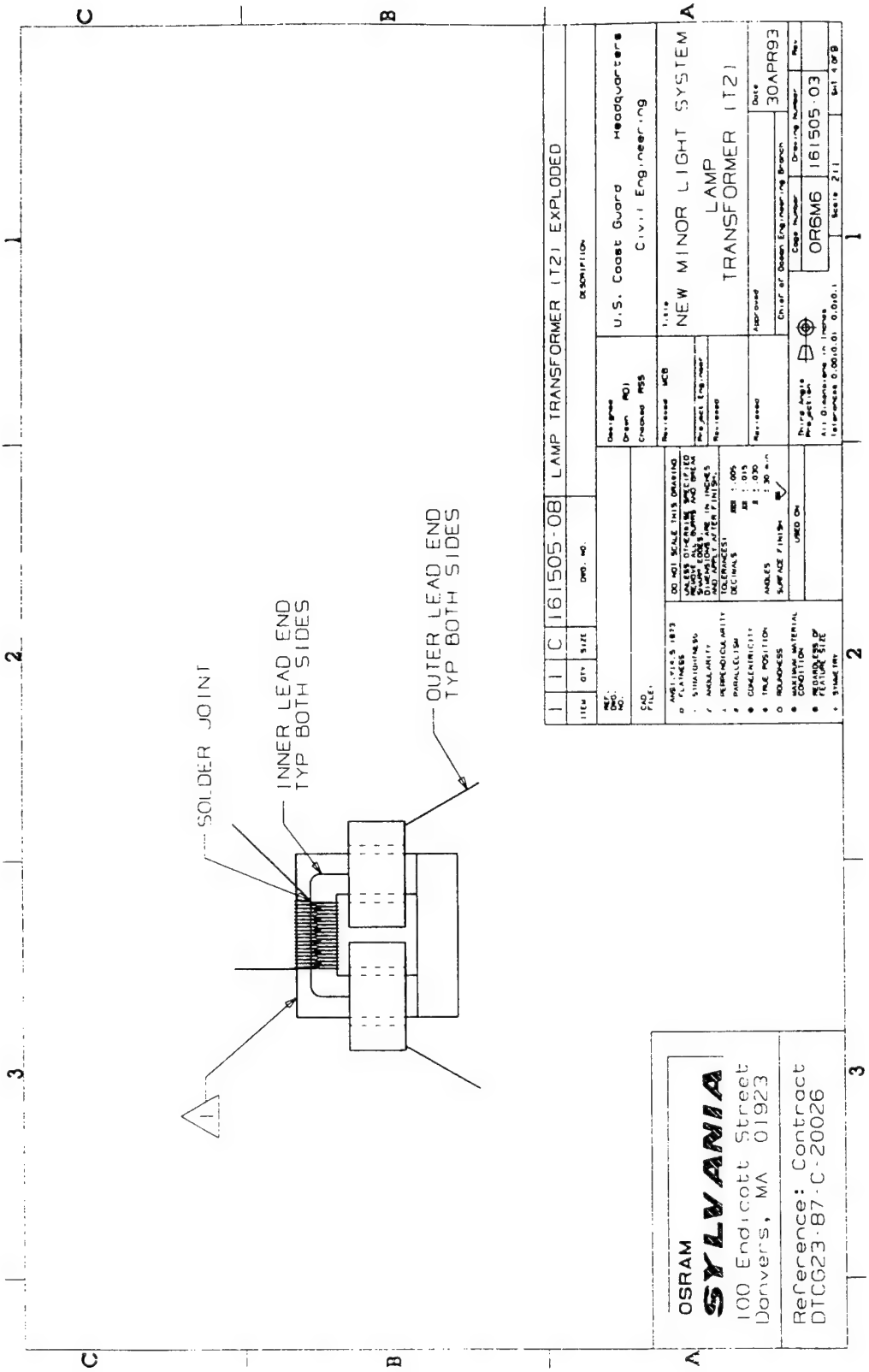

Drawing #161505-03, Lamp Transformer T2

6.2.2 Lamp Inductor (L2)

1. Parts and Materials

    1. Transformer wire - #24 Heavy Soderon copper wire
    2. Ring core (L2) - Magnetics Inc., Part # 116F-58120-A2/2-0

2. Tools and Equipment

    1. Wire cutters/strippers

3. Procedure

    1. Cut a piece of transformer wire about 5-6 feet long.
    2. Wrap it through the ring core 65 turns.
       Leave about 6-8 inches of excess wire on each end.

6.3 Tuning Lamp to Power

1. Parts and Materials

    1. Solder - Kester SN60PB40, 0.031, QQS571E WRAP 3, 24-6040-0027
    2. 0.010" thick x 0.060" wide nickel ribbon
    3. Lamp transformer (T2) per Section 6.2.1
    4. Lamp inductor (L2) per Section 6.2.2
    5. Jacketed lamp per Section 5.5
    6. Lamp base assembly per Section 6.1.2

2. Tools and Equipment

    1. Soldering iron
    2. Wire cutters/strippers;
    3. Electric welder - Taylor Winfield Spot Welder, type EB-1-2 with Robotron power supply #01015-01
    4. High frequency power meter - XITRON 2502-H Power Analyzer
    5. 12V DC power supply
    6. Electrical leads (connections as desired)
    7. Lamp power supply unit per Section 7
    8. Diamond file
    9. Ring stand
    10. 3-prong clamp
    11. Carborundum glass-cutting wheel

3. Procedure

    1. Cut the tungsten lamp leads to about 0.25" long
    2. File them with diamond tip file to remove excess tungsten oxide.
    3. Cut nickel ribbon into 0.250" lengths.
    4. Weld them onto the tungsten leads per Figure 6-1 (lamp) using spot welder.
    5. Strip the wiring of each component and tin each end for soldering.
    6. Solder the connections as assigned in all of Figure 6-1 (1-1, 2-2, etc.). Be sure to leave plenty of excess wire for the time being.
    7. Tune to run at $3.0 \pm .2$ watts.
        1. Use the set-up shown in Figure 6-2 to run the lamp.
        2. Using the ring stand and 3-prong clamp, mount the lamp vertically and let it warm up for about 30 minutes.
        3. Read and record the power while the lamp is running.
        4. Using a short clip-leaded wire, short the lamp leads (connect A to B Figure 6-2).
        5. Read and record the power.
           The actual lamp power is the difference between the two power readings.
        6. If the power is below 3 watts, disconnect joint 1-1 or 2-2 (Figure 6-1) and unwind a few coils from the inductor.
           If the lamp is running above 3 watts, add a few turns to the circular inductor.
        7. Reconnect the circuit and repeat the power readings after about 10 minutes of running the lamp.
    8. Once the lamp is tuned to 3 watts all of the excess wire can be removed and short connections can be made.
       This is necessary because the inductor, transformer and wiring must be potted in the base with no exposure.

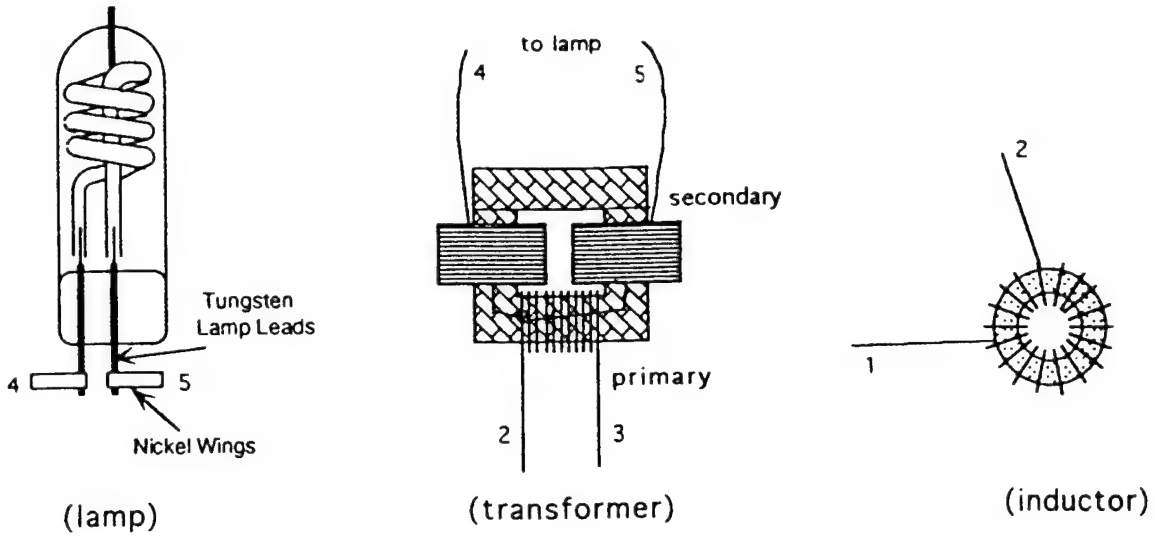

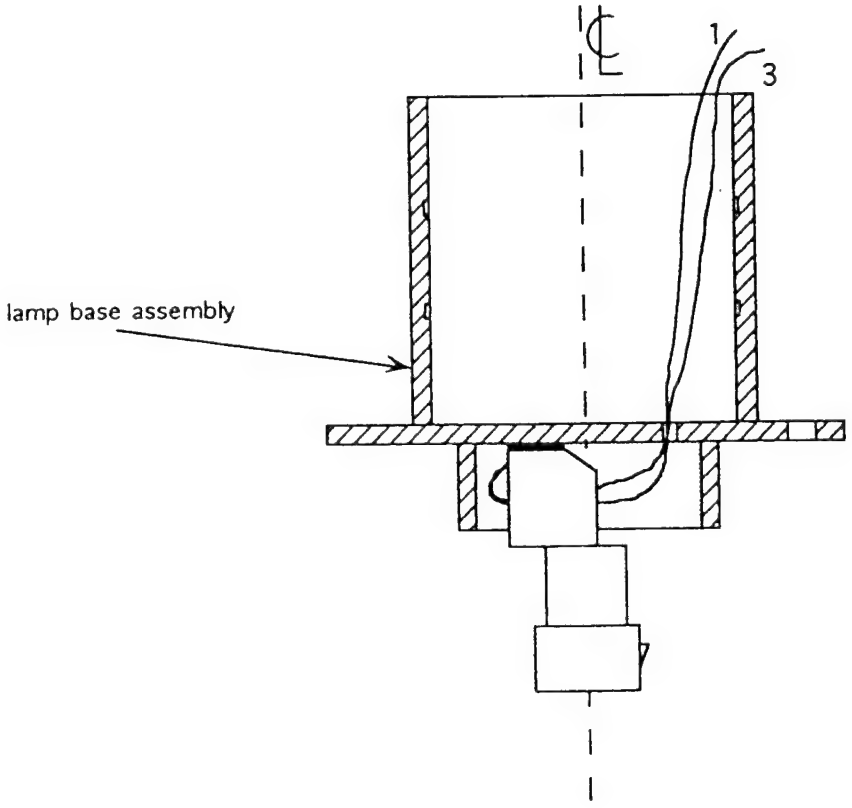

Figure 6-1. Component Connections for Tuning Lamp Power

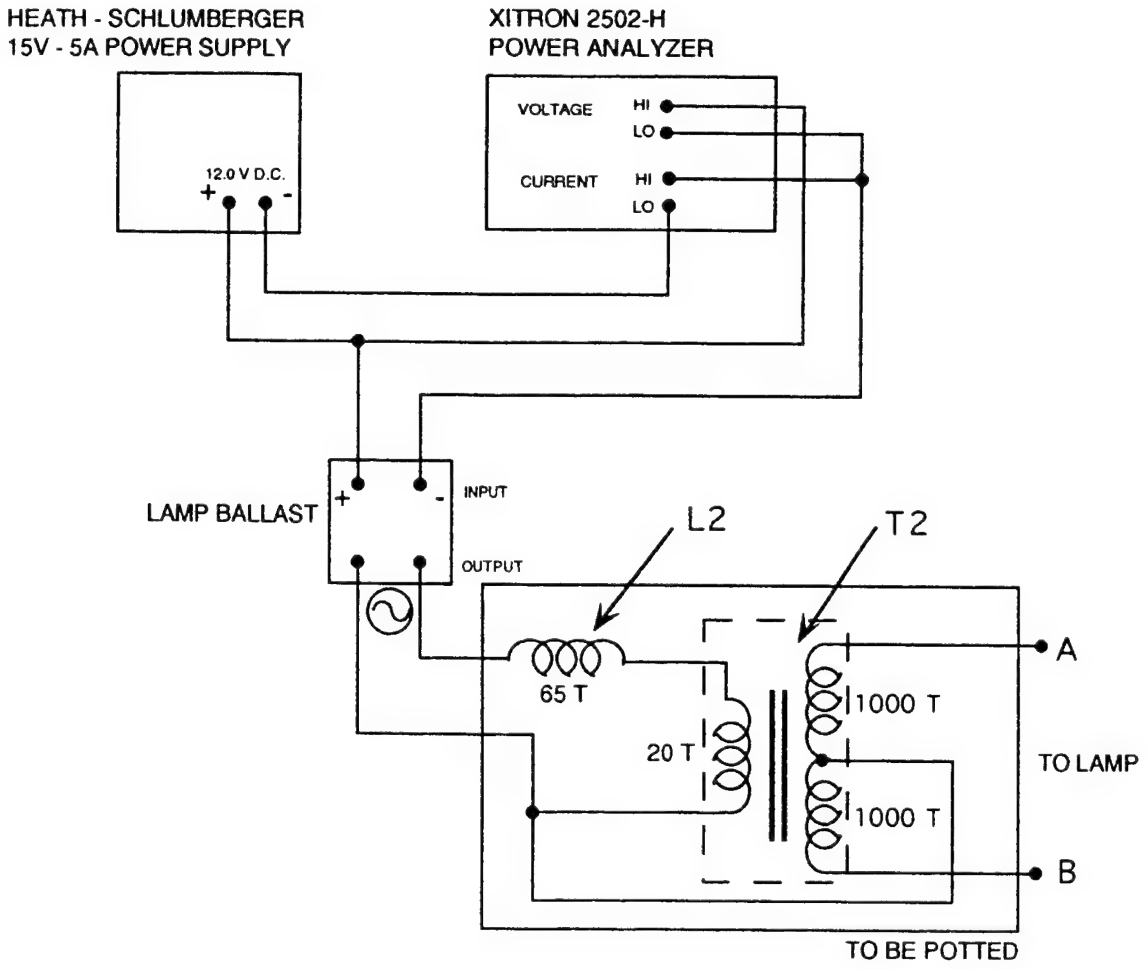

Figure 6-2. Schematic Circuit Diagram for Lamp Base Wiring

6.4 Potting Components into Base

1. Parts and Materials

    1. Emerson & Cuming Stycast 2057 epoxy resin
    2. Emerson & Cuming Catalyst #9
    3. Tuned lamp assembly per Section 6.3
    4. Lamp Identification Label per Drawing #161505-06

2. Tools and Equipment

    1. Weight scale with 3 kg capacity
    2. 1/8 inch hex wrench
    3. 8 ounce paper cups
    4. Vacuum system
    5. 10-15 liter vacuum chamber
    6. Potting fixture per OSI Drawing # D41-527596

3. Procedure

    1. Place lamp assembly into fixture to hold the lamp in the center of the machined base.
    2. Set the height of the center of the coils per Drawing #161503 (see Figure 6-3).
    3. Put the electronic components into the base cylinder. Be sure they are well below the top rim and that no exposed wires, inside, are touching.
    4. Mix epoxy.
        1. Weigh out 100 grams of Stycast 2057 Epoxy Resin into a paper cup.
        2. Add 7 grams of catalyst #9.
        3. Mix them thoroughly.
        4. Place the cup into a small vacuum chamber.
        5. Pull a rough vacuum on the mixture for about 10 minutes. This will remove most of the large bubbles trapped within the mixture.
        6. Bring the mixture back to atmosphere.
        7. Remove it from the chamber.
    5. Pour epoxy into the base cylinder until it is full.
       Note: The potting is very viscous and black.
       Use caution to not over-fill the base or get any on skin or clothing.
    6. Let the potting set for about 8 or more hours at room temperature.
    7. Recheck the operation of the lamp.
    8. Place label specified in Drawing #161505-06 onto the lamp base per Drawing #161505.

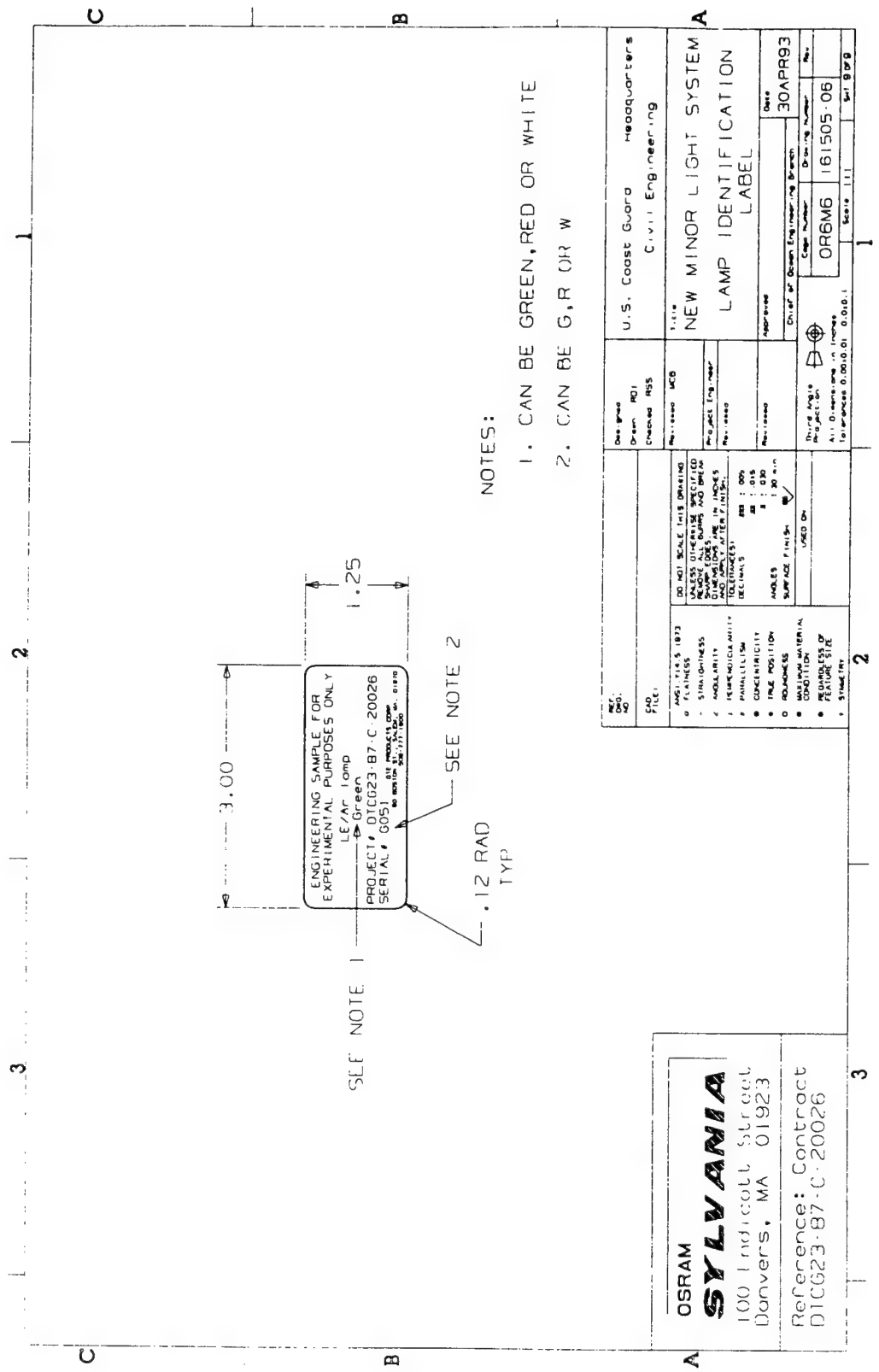

Drawing #161505-06, Lamp Identification Label

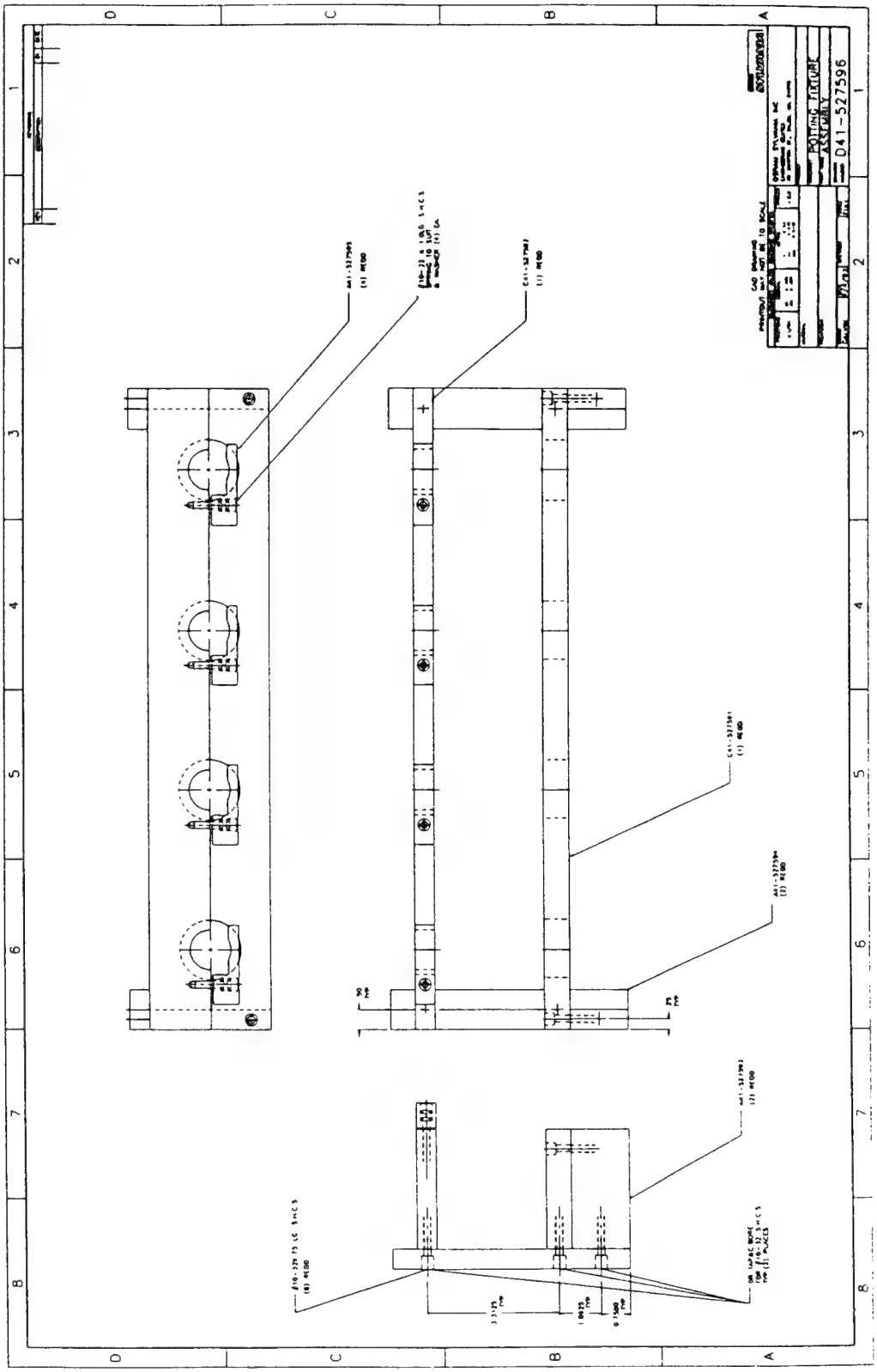

Drawing #D41-52796, Potting Fixture

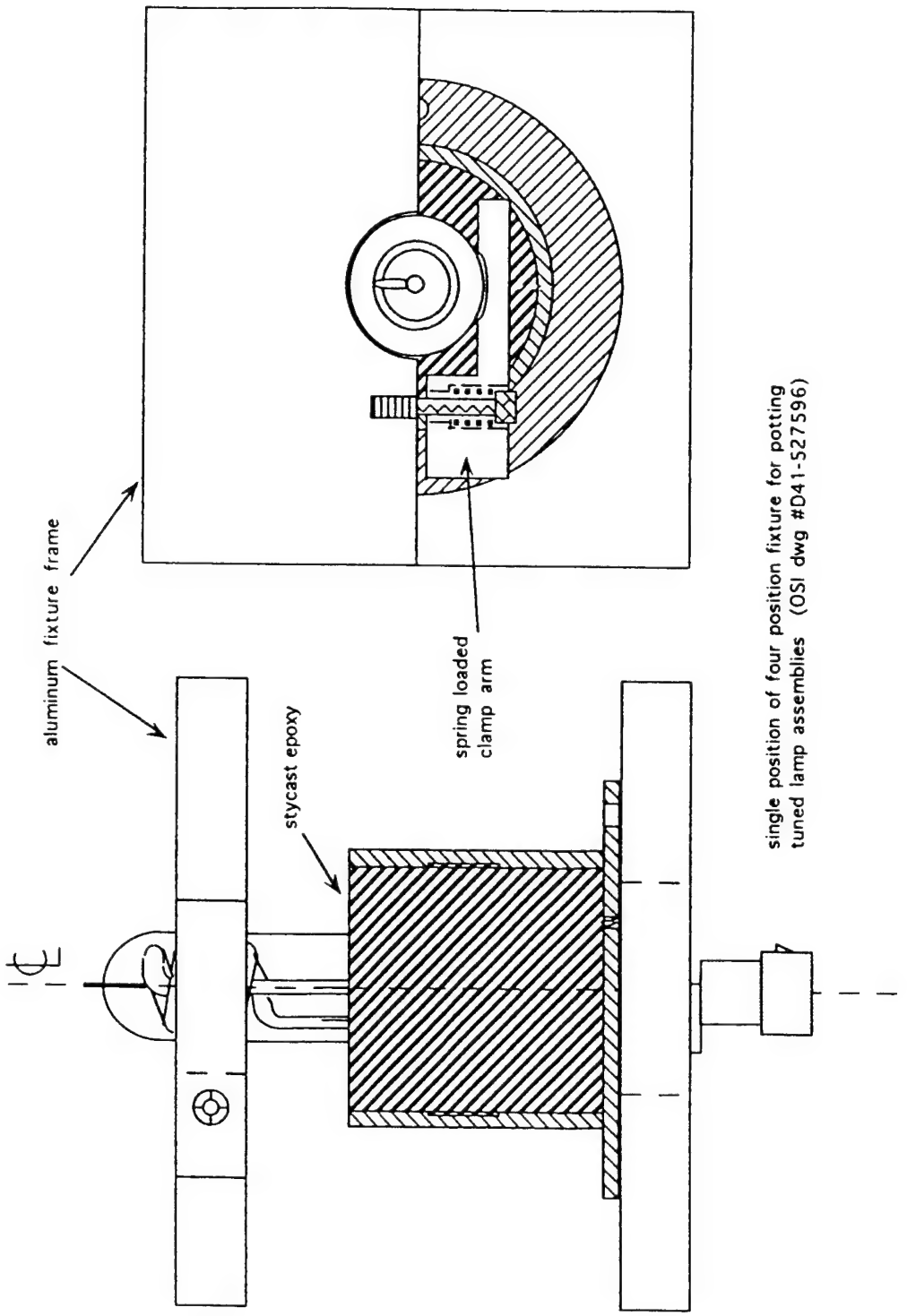

Figure 6-3. Mounting Arrangement for Potting Lamp into Lamp Base

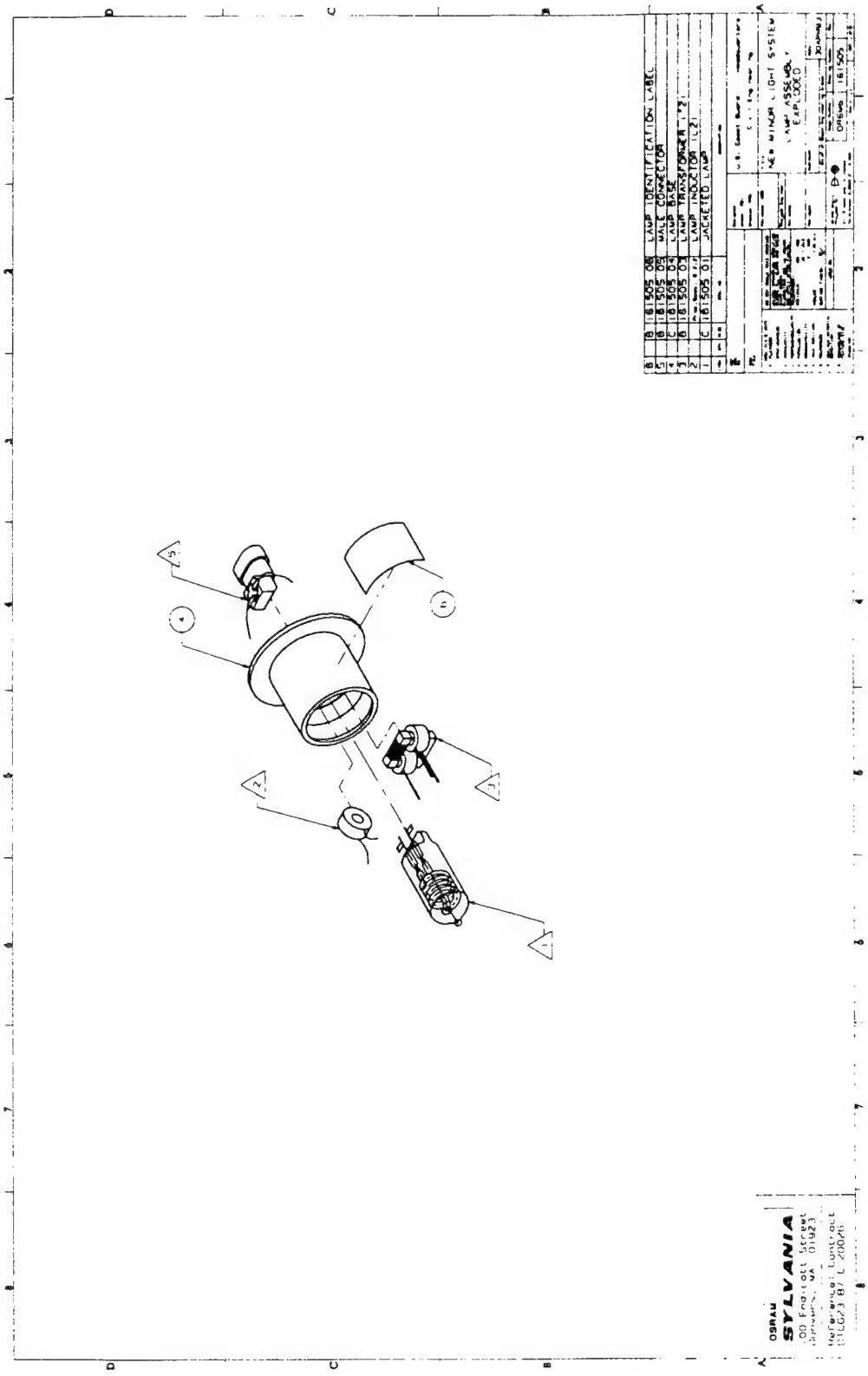

Drawing #161505, Lamp Assembly, Exploded

7. POWER SUPPLY ASSEMBLY

7.1 Power Supply Board

7.1.1 Power Supply Transformer (T1)

1. Parts and Materials

    1. Solder - Kester SN60PB40, 0.031, QQS571E WRAP 3, 24-6040-0027
    2. Transformer wire - Soderon copper wire, #26 and #28
    3. Electrical tape - 3M, Scotch Brand, type 8756-3, 1/4" white
    4. 2-piece core (T1 and L1) - Philips, part #1811-PA75-3C8
    5. Bobbin (T1 and L1) - Philips, part #1811-PCB1-6
    6. Core washer (T1 and L1) - Philips, part #991-581-000
    7. Core clamp (T1 and L1) - Philips, part #1811 HPC

2. Tools and Equipment

    1. Soldering iron
    2. Wire cutters/strippers

3. Procedure

    1. Cut a 10-foot piece of #26 transformer wire and wrap one end around the leg lead of the bobbin per Figure 7-1(a).
    2. Wrap the wire around the single section bobbin tightly 70 times. The direction is important and neatness is required in order to get the full 70 turns around the bobbin.
    3. Cut and strip the ends and solder them to the terminal feet per Figure 7-1(a).
    4. Wrap one turn of electrical tape around the secondary windings.
    5. Cut a 3-foot length of #28 transformer wire.
    6. Attach one end to the post opposite to the secondary per Figure 7-1(b).
    7. Wrap 14 turns as previously described, in the direction indicated in Figure 7-1(b).
    8. After 14th turn is completed, cut strip and solder the ends of the wire per Figure 7-1(b).
    9. Assemble the 2-piece core, core washer, and core clamp per Figure 7-1(c). The wires must be tucked inside of the plastic neck of the bobbin in order to fit the core pieces properly. The clamp is tricky to install. Care must be taken not to crack the core sections.

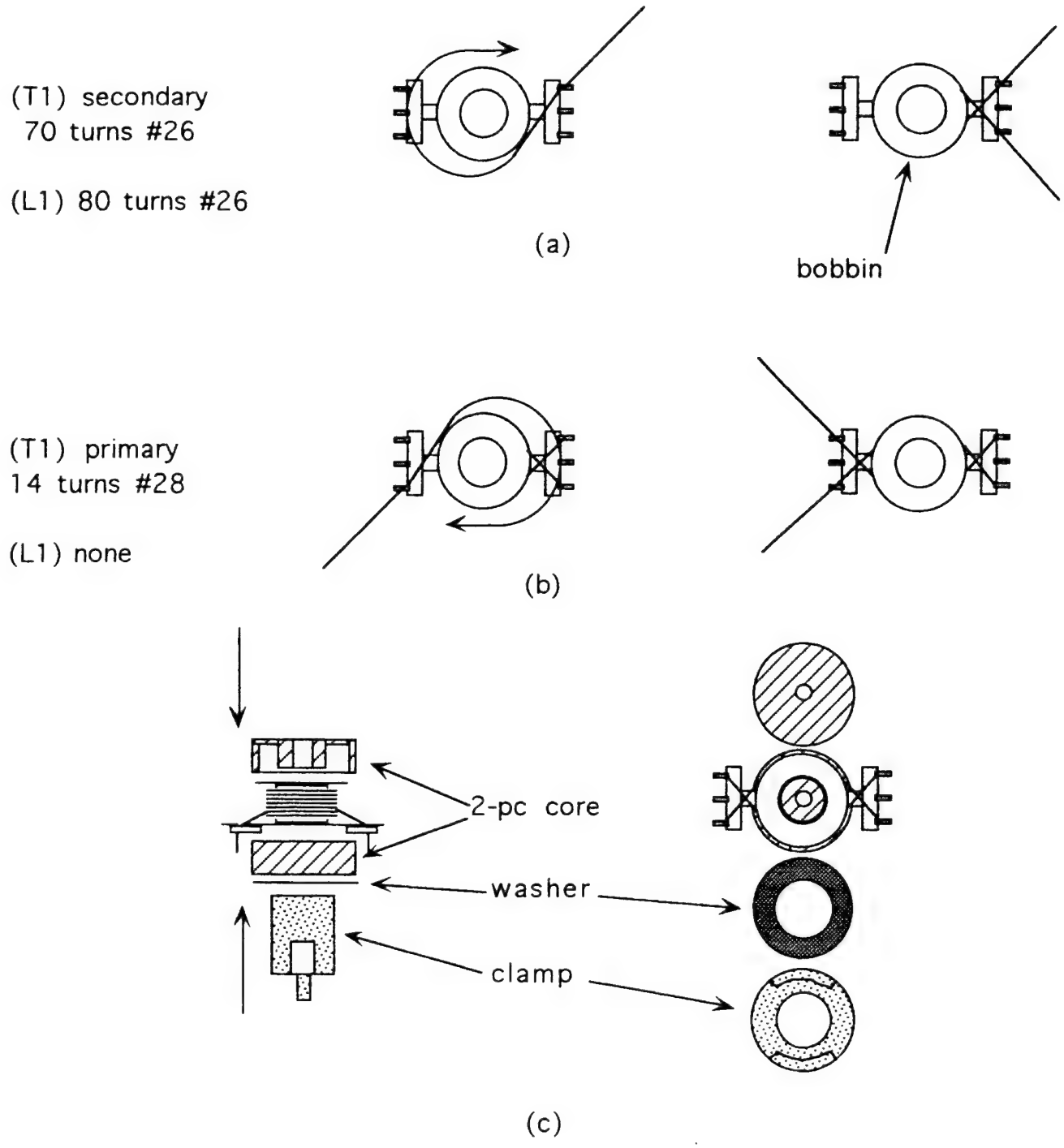

Figure 7-1. Winding Power Supply Transformer and Inductor

7.1.2 Power Supply Inductor (L1)

1. Parts and Materials

    1. Solder - Kester SN60PB40, 0.031, QQS571E WRAP 3, 24-6040-0027
    2. Transformer wire - #26 Soderon copper wire
    3. Electrical tape - 3M, Scotch Brand, type 8756-3, 1/4" white
    4. 2-piece core (T1 and L1) - Philips, part #1811-PA75-3C8
    5. Bobbin (T1 and L1) - Philips, part #1811-PCB1-6
    6. Core washer (T1 and L1) - Philips, part #991-581-000
    7. Core clamp (T1 and L1) - Philips, part #1811 HPC

2. Tools and Equipment

    1. Soldering iron
    2. Wire cutters/strippers

3. Procedure

    1. Cut a 10-foot piece of #26 transformer wire and wrap one end around the leg lead of the bobbin per Figure 7-1(a).
    2. Wrap the wire around the single section bobbin tightly 80 times. Neatness is required in order to get the full 80 turns around the bobbin.
    3. Cut and strip the ends and solder them to the terminal feet per Figure 7-1(a).
    4. Wrap one turn of electrical tape around the windings.
    5. Assemble the two-piece core, core washer, and core clamp per Figure 7-1(c). The wires must be tucked inside of the plastic neck of the bobbin in order to fit the core pieces properly. The clamp is tricky to install. Care must be taken not to crack the core sections.

7.1.3 Heat Sink / IC2 Component

1. Parts and Materials

    1. Thermal joint compound - Thermalcote, Thermalloy Inc. stock #249
    2. Heat sink - Thermalloy Inc. type 6025D, Newark stock #46F116
    3. 1/8" pop-rivet
    4. IC2; LT1172CT

2. Tools and Equipment

    1. Hacksaw
    2. Pop-rivet tool

3. Procedure

    1. Trim off 0.375" from the top of the heat sink.
    2. Align the back of the IC with the hole of the heat sink.
    3. Place a dollop of the thermal joint compound onto its surface.
    4. Fasten the IC to the heat sink with the component legs down per Figure 7-2 using a 1/8 " pop rivet.

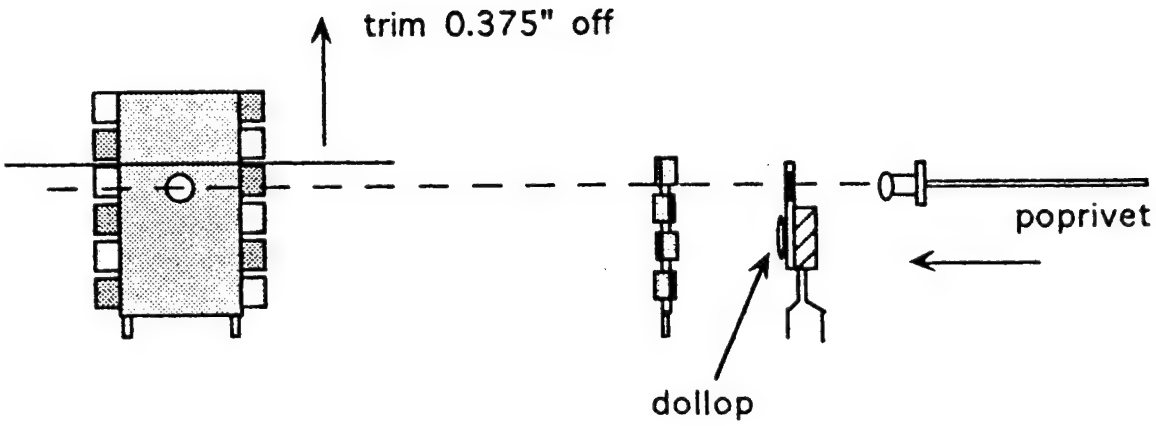

Figure 7-2. Assembling Heat Sink and IC2

7.1.4 Board Assembly

1. Parts and Materials

    1. Solder - Kester SN60PB40, 0.031, QQS571E WRAP 3, 24-6040-0027
    2. Electrical components per Drawing #161506
    3. Power supply printed circuit board per Drawing #161506-01
    4. Power supply transformer (T1) per Section 7.1.1
    5. Power supply inductor (L1) per Section 7.1.2
    6. Heat sink/IC2; per Section 7.1.3

2. Tools and Equipment

    1. Soldering iron

3. Procedure

    1. Assemble parts onto board per Drawing #161506.
    Be sure to align T1 per the secondary(s) and primary(p) designations.

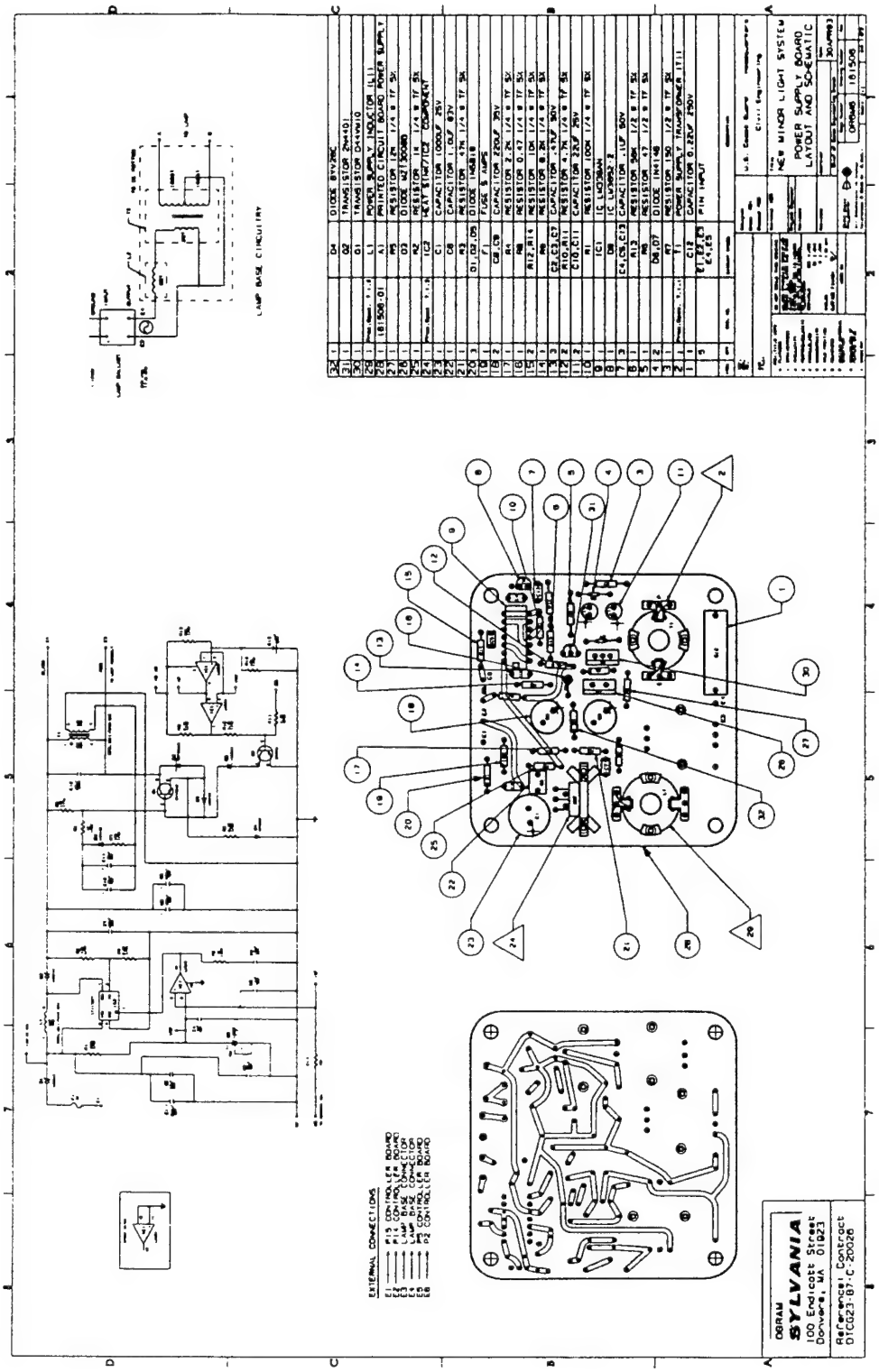

Drawing #161506. Power Supply Board Layout and Schematic

7.2 Controller Board

7.2.1 EPROM Programming and Burn-in

1. Parts and Materials
    1. EPROM chip - National Semiconductor #NMC27C32Q-35
2. Tools and Equipment
    1. PROM Burner
3. Procedure
    1. Burn in EPROM IC per PROM map specified in Table 7-1.

PROM MAP

ADDRESS	DATA	ASCII
0000	80 80 80 80 00 00 00 00 00 00 00 00 00 00 00 00	.....
0010	00 00 00 00 00 00 00 00 00 00 00 00 00 00 00 00	.....
0020	00 00 00 00 00 00 00 00 00 00 00 00 00 00 00 00	.....
0030	00 00 00 00 00 00 00 00 00 00 00 00 00 00 00 00	.....
0040	00 00 00 00 00 00 00 00 00 00 00 00 00 00 00 00	.....
0050	00 00 00 00 00 00 00 00 00 00 00 00 00 00 00 00	.....
0060	00 00 00 00 00 00 00 00 00 00 00 00 00 00 00 00	.....
0070	00 00 00 00 00 00 00 00 00 00 00 00 00 00 00 00	.....
0080	81 82 83 84 85 86 87 88 89 8A 8B 8C 8D 8E 8F 90	.....
0090	91 92 93 94 95 96 97 98 99 9A 9B 9C 9D 9E 1F 20	.....
00A0	21 22 23 24 25 26 27 28 29 2A 2B 2C 2D 2E 2F 30	!" #$ % & ' ( ) *+,-./0
00B0	31 32 33 34 35 36 37 38 39 3A 3B 00 00 00 00 00	123456789:;.....
00C0	00 00 00 00 00 00 00 00 00 00 00 00 00 00 00 00	.....
00D0	00 00 00 00 00 00 00 00 00 00 00 00 00 00 00 00	.....
00E0	00 00 00 00 00 00 00 00 00 00 00 00 00 00 00 00	.....
00F0	00 00 00 00 00 00 00 00 00 00 00 00 00 00 00 00	.....
0100	81 82 83 84 05 06 07 08 09 0A 0B 0C 0D 0E 0F 10	.....
0110	11 12 13 14 15 16 17 18 19 1A 1B 1C 1D 1E 1F 20	.....
0120	21 22 23 24 25 26 27 00 00 00 00 00 00 00 00 00	!"#$%&'.....
0130	00 00 00 00 00 00 00 00 00 00 00 00 00 00 00 00	.....
0140	00 00 00 00 00 00 00 00 00 00 00 00 00 00 00 00	.....
0150	00 00 00 00 00 00 00 00 00 00 00 00 00 00 00 00	.....
0160	00 00 00 00 00 00 00 00 00 00 00 00 00 00 00 00	.....
0170	00 00 00 00 00 00 00 00 00 00 00 00 00 00 00 00	.....
0180	81 82 83 84 85 86 07 08 09 0A 0B 0C 0D 0E 0F 10	.....
0190	11 12 13 14 15 16 17 18 19 1A 1B 1C 1D 1E 1F 20	.....
01A0	21 22 23 24 25 26 27 28 29 2A 2B 2C 2D 2E 2F 30	!" #$ % & ' ( ) *+,- /0
01B0	31 32 33 34 35 36 37 38 39 3A 3B 00 00 00 00 00	123456789: ;.....
01C0	00 00 00 00 00 00 00 00 00 00 00 00 00 00 00 00	.....
01D0	00 00 00 00 00 00 00 00 00 00 00 00 00 00 00 00	.....
01E0	00 00 00 00 00 00 00 00 00 00 00 00 00 00 00 00	.....
01F0	00 00 00 00 00 00 00 00 00 00 00 00 00 00 00 00	.....
0200	81 82 83 04 05 06 07 08 09 0A 0B 0C 0D 0E 0F 10	.....
0210	11 12 13 14 15 16 17 18 00 00 00 00 00 00 00 00	.....
0220	00 00 00 00 00 00 00 00 00 00 00 00 00 00 00 00	.....
0230	00 00 00 00 00 00 00 00 00 00 00 00 00 00 00 00	.....
0240	00 00 00 00 00 00 00 00 00 00 00 00 00 00 00 00	.....
0250	00 00 00 00 00 00 00 00 00 00 00 00 00 00 00 00	.....
0260	00 00 00 00 00 00 00 00 00 00 00 00 00 00 00 00	.....
0270	00 00 00 00 00 00 00 00 00 00 00 00 00 00 00 00	.....
0280	81 82 83 04 05 06 07 08 09 00 00 00 00 00 00 00	.....
0290	00 00 00 00 00 00 00 00 00 00 00 00 00 00 00 00	.....
02A0	00 00 00 00 00 00 00 00 00 00 00 00 00 00 00 00	.....
02B0	00 00 00 00 00 00 00 00 00 00 00 00 00 00 00 00	.....
02C0	00 00 00 00 00 00 00 00 00 00 00 00 00 00 00 00	.....
02D0	00 00 00 00 00 00 00 00 00 00 00 00 00 00 00 00	.....
02E0	00 00 00 00 00 00 00 00 00 00 00 00 00 00 00 00	.....
02F0	00 00 00 00 00 00 00 00 00 00 00 00 00 00 00 00	.....
0300	81 82 03 00 00 00 00 00 00 00 00 00 00 00 00 00	.....
0310	00 00 00 00 00 00 00 00 00 00 00 00 00 00 00 00	.....
0320	00 00 00 00 00 00 00 00 00 00 00 00 00 00 00 00	.....
0330	00 00 00 00 00 00 00 00 00 00 00 00 00 00 00 00	.....

```
0340 : 00 00 00 00 00 00 00 00 00 00 00 00 00 00 00 00 ................
0350 : 00 00 00 00 00 00 00 00 00 00 00 00 00 00 00 00 ................
0360 : 00 00 00 00 00 00 00 00 00 00 00 00 00 00 00 00 ................
0370 : 00 00 00 00 00 00 00 00 00 00 00 00 00 00 00 00 ................
0380 : 81 82 83 84 05 06 07 08 09 0A 8B 8C 8D 8E 8F 90 ................
0390 : 91 92 93 94 95 96 97 98 99 9A 9B 9C 9D 9E 1F 20 ...............
03A0 : 21 22 23 24 25 26 27 28 29 2A 2B 2C 2D 2E 2F 30 ! " # $ % & ' ()*+,-./0
03B0 : 31 32 33 34 35 36 37 38 39 3A 3B 3C 3D 3E 3F 40 123456789:;<=>?@
03C0 : 41 42 43 44 45 46 47 48 49 4A 4B 4C 4D 4E 4F 00 A B C DE F G H IJ KLM NO.
03D0 : 00 00 00 00 00 00 00 00 00 00 00 00 00 00 00 00 ................
03E0 : 00 00 00 00 00 00 00 00 00 00 00 00 00 00 00 00 ................
03F0 : 00 00 00 00 00 00 00 00 00 00 00 00 00 00 00 00 ................
0400 : 81 82 83 84 05 06 07 08 09 0A 8B 8C 8D 8E 8F 90 ................
0410 : 91 92 93 94 95 96 97 98 99 9A 9B 9C 9D 9E 1F 20 ...............
0420 : 21 22 23 24 25 26 27 28 29 2A 2B 2C 2D 2E 2F 30 !" #$ % & ' () *+,-./0
0430 : 31 32 33 34 35 36 37 38 39 3A 3B 3C 3D 3E 3F 40 123456789:;<=>?@
0440 : 41 42 43 44 45 46 47 48 49 4A 4B 4C 4D 4D 4F 00 A B CD E F G HI J KL MNO.
0450 : 00 00 00 00 00 00 00 00 00 00 00 00 00 00 00 00 ................
0460 : 00 00 00 00 00 00 00 00 00 00 00 00 00 00 00 00 ................
0470 : 00 00 00 00 00 00 00 00 00 00 00 00 00 00 00 00 ................
0480 : 81 82 03 00 00 00 00 00 00 00 00 00 00 00 00 00 ................
0490 : 00 00 00 00 00 00 00 00 00 00 00 00 00 00 00 00 ................
04A0 : 00 00 00 00 00 00 00 00 00 00 00 00 00 00 00 00 ................
04B0 : 00 00 00 00 00 00 00 00 00 00 00 00 00 00 00 00 ................
04C0 : 00 00 00 00 00 00 00 00 00 00 00 00 00 00 00 00 ................
04D0 : 00 00 00 00 00 00 00 00 00 00 00 00 00 00 00 00 ................
04E0 : 00 00 00 00 00 00 00 00 00 00 00 00 00 00 00 00 ................
04F0 : 00 00 00 00 00 00 00 00 00 00 00 00 00 00 00 00 ................
0500 : 81 82 83 04 05 06 07 08 09 00 00 00 00 00 00 00 ................
0510 : 00 00 00 00 00 00 00 00 00 00 00 00 00 00 00 00 ................
0520 : 00 00 00 00 00 00 00 00 00 00 00 00 00 00 00 00 ................
0530 : 00 00 00 00 00 00 00 00 00 00 00 00 00 00 00 00 ................
0540 : 00 00 00 00 00 00 00 00 00 00 00 00 00 00 00 00 ................
0550 : 00 00 00 00 00 00 00 00 00 00 00 00 00 00 00 00 ................
0560 : 00 00 00 00 00 00 00 00 00 00 00 00 00 00 00 00 ................
0570 : 00 00 00 00 00 00 00 00 00 00 00 00 00 00 00 00 ................
0580 : 81 82 83 04 05 06 07 08 09 0A 0B 0C 0D 0E 0F 10 ................
0590 : 11 12 13 14 15 16 17 18 00 00 00 00 00 00 00 00 ................
05A0 : 00 00 00 00 00 00 00 00 00 00 00 00 00 00 00 00 ................
05B0 : 00 00 00 00 00 00 00 00 00 00 00 00 00 00 00 00 ................
05C0 : 00 00 00 00 00 00 00 00 00 00 00 00 00 00 00 00 ................
05D0 : 00 00 00 00 00 00 00 00 00 00 00 00 00 00 00 00 ................
05E0 : 00 00 00 00 00 00 00 00 00 00 00 00 00 00 00 00 ................
05F0 : 00 00 00 00 00 00 00 00 00 00 00 00 00 00 00 00 ................
0600 : 81 82 83 84 85 86 07 08 09 0A 0B 0C 0D 0E 0F 10 ................
0610 : 11 12 13 14 15 16 17 18 19 1A 1B 1C 1D 1E 1F 20 ...............
0620 : 21 22 23 24 25 26 27 28 29 2A 2B 2C 2D 2E 2F 30 ! " # $ % & '() *+,-./0
0630 : 31 32 33 34 35 36 37 38 39 3A 3B 00 00 00 00 00 1 23 45 6789:;.....
0640 : 00 00 00 00 00 00 00 00 00 00 00 00 00 00 00 00 ................
0650 : 00 00 00 00 00 00 00 00 00 00 00 00 00 00 00 00 ................
0660 : 00 00 00 00 00 00 00 00 00 00 00 00 00 00 00 00 ................
0670 : 00 00 00 00 00 00 00 00 00 00 00 00 00 00 00 00 ................
0680 : 81 82 83 84 05 06 07 08 09 0A 0B 0C 0D 0E 0F 10 ................
0690 : 11 12 13 14 15 16 17 18 19 1A 1B 1C 1D 1E 1F 20 ...............
06A0 : 21 22 23 24 25 26 27 00 00 00 00 00 00 00 00 00 !" # $ %&'.......
06B0 : 00 00 00 00 00 00 00 00 00 00 00 00 00 00 00 00 ................
06C0 : 00 00 00 00 00 00 00 00 00 00 00 00 00 00 00 00 ................
06D0 : 00 00 00 00 00 00 00 00 00 00 00 00 00 00 00 00 ................
```

```
06E0 : 00 00 00 00 00 00 00 00 00 00 00 00 00 00 00 00 00  ................
06F0 : 00 00 00 00 00 00 00 00 00 00 00 00 00 00 00 00 00  ................
0700 : 81 82 83 84 85 86 87 88 89 8A 8B 8C 8D 8E 8F 90     ................
0710 : 91 92 93 94 95 96 97 98 99 9A 9B 9C 9D 9E 1F 20     ...............
0720 : 21 22 23 24 25 26 27 28 29 2A 2B 2C 2D 2E 2F 30     ! " # $ % & '() *+,-./0
0730 : 31 32 33 34 35 36 37 38 39 3A 3B 00 00 00 00 00     1 23 456789:; .....
0740 : 00 00 00 00 00 00 00 00 00 00 00 00 00 00 00 00 00  ................
0750 : 00 00 00 00 00 00 00 00 00 00 00 00 00 00 00 00 00  ................
0760 : 00 00 00 00 00 00 00 00 00 00 00 00 00 00 00 00 00  ................
0770 : 00 00 00 00 00 00 00 00 00 00 00 00 00 00 00 00 00  ................
0780 : 80 80 80 80 00 00 00 00 00 00 00 00 00 00 00 00 00  ................
0790 : 00 00 00 00 00 00 00 00 00 00 00 00 00 00 00 00 00  ................
07A0 : 00 00 00 00 00 00 00 00 00 00 00 00 00 00 00 00 00  ................
07B0 : 00 00 00 00 00 00 00 00 00 00 00 00 00 00 00 00 00  ................
07C0 : 00 00 00 00 00 00 00 00 00 00 00 00 00 00 00 00 00  ................
07D0 : 00 00 00 00 00 00 00 00 00 00 00 00 00 00 00 00 00  ................
07E0 : 00 00 00 00 00 00 00 00 00 00 00 00 00 00 00 00 00  ................
07F0 : 00 00 00 00 00 00 00 00 00 00 00 00 00 00 00 00 00  ................
0800 : 63 6F 70 79 72 69 67 68 74 20 31 39 39 31 20 67     c o p y r ight 1991 g
0810 : 74 65 20 65 6C 65 63 74 72 69 63 61 6C 20 70 72     te e l ectr i c a l pr
0820 : 6F 64 75 63 74 73 20 63 6F 72 70 6F 72 61 74 69     o d u c t s c o p orati
0830 : 6F 6E 20 FF FF FF FF FF FF FF FF FF FF FF FF FF FF  on ..............
0840 : FF FF FF FF FF FF FF FF FF FF FF FF FF FF FF FF FF  ................
0850 : FF FF FF FF FF FF FF FF FF FF FF FF FF FF FF FF FF  ................
0860 : FF FF FF FF FF FF FF FF FF FF FF FF FF FF FF FF FF  ................
0870 : FF FF FF FF FF FF FF FF FF FF FF FF FF FF FF FF FF  ................
0880 : FF FF FF FF FF FF FF FF FF FF FF FF FF FF FF FF FF  ................
0890 : FF FF FF FF FF FF FF FF FF FF FF FF FF FF FF FF FF  ................
08A0 : FF FF FF FF FF FF FF FF FF FF FF FF FF FF FF FF FF  ................
08B0 : FF FF FF FF FF FF FF FF FF FF FF FF FF FF FF FF FF  ................
08C0 : FF FF FF FF FF FF FF FF FF FF FF FF FF FF FF FF FF  ................
08D0 : FF FF FF FF FF FF FF FF FF FF FF FF FF FF FF FF FF  ................
08E0 : FF FF FF FF FF FF FF FF FF FF FF FF FF FF FF FF FF  ................
08F0 : FF FF FF FF FF FF FF FF FF FF FF FF FF FF FF FF FF  ................
0900 : FF FF FF FF FF FF FF FF FF FF FF FF FF FF FF FF FF  ................
0910 : FF FF FF FF FF FF FF FF FF FF FF FF FF FF FF FF FF  ................
0920 : FF FF FF FF FF FF FF FF FF FF FF FF FF FF FF FF FF  ................
0930 : FF FF FF FF FF FF FF FF FF FF FF FF FF FF FF FF FF  ................
0940 : FF FF FF FF FF FF FF FF FF FF FF FF FF FF FF FF FF  ................
0950 : FF FF FF FF FF FF FF FF FF FF FF FF FF FF FF FF FF  ................
0960 : FF FF FF FF FF FF FF FF FF FF FF FF FF FF FF FF FF  ................
0970 : FF FF FF FF FF FF FF FF FF FF FF FF FF FF FF FF FF  ................
0980 : FF FF FF FF FF FF FF FF FF FF FF FF FF FF FF FF FF  ................
0990 : FF FF FF FF FF FF FF FF FF FF FF FF FF FF FF FF FF  ................
09A0 : FF FF FF FF FF FF FF FF FF FF FF FF FF FF FF FF FF  ................
09B0 : FF FF FF FF FF FF FF FF FF FF FF FF FF FF FF FF FF  ................
09C0 : FF FF FF FF FF FF FF FF FF FF FF FF FF FF FF FF FF  ................
09D0 : FF FF FF FF FF FF FF FF FF FF FF FF FF FF FF FF FF  ................
09E0 : FF FF FF FF FF FF FF FF FF FF FF FF FF FF FF FF FF  ................
09F0 : FF FF FF FF FF FF FF FF FF FF FF FF FF FF FF FF FF  ................
0A00 : FF
```

7.2.2 Board Assembly

1. Parts and Materials

    1. Solder Kester SN60PB40, 0.031, QQS571E WRAP 3, 24-6040-0027
    2. Silicone rubber general purpose sealant
    3. Electrical components per Drawing #161507
    4. Controller printed circuit board per Drawing #161507-01

2. Tools and Equipment

    1. Soldering iron

3. Procedure

    1. Assemble components onto board per Drawing #161507.
       Be sure to note the wiring modifications stated in the drawing.
    2. Make connections on underside of board per Figure 7-3(a).
    3. When installing the Bomar Crystal put right angle bends in the leads before soldering them into the board.
       The crystal shall lay flat on top of IC U1.
       Place a dollop of silicone sealant on the IC to anchor the crystal per Figure 7-3(b).

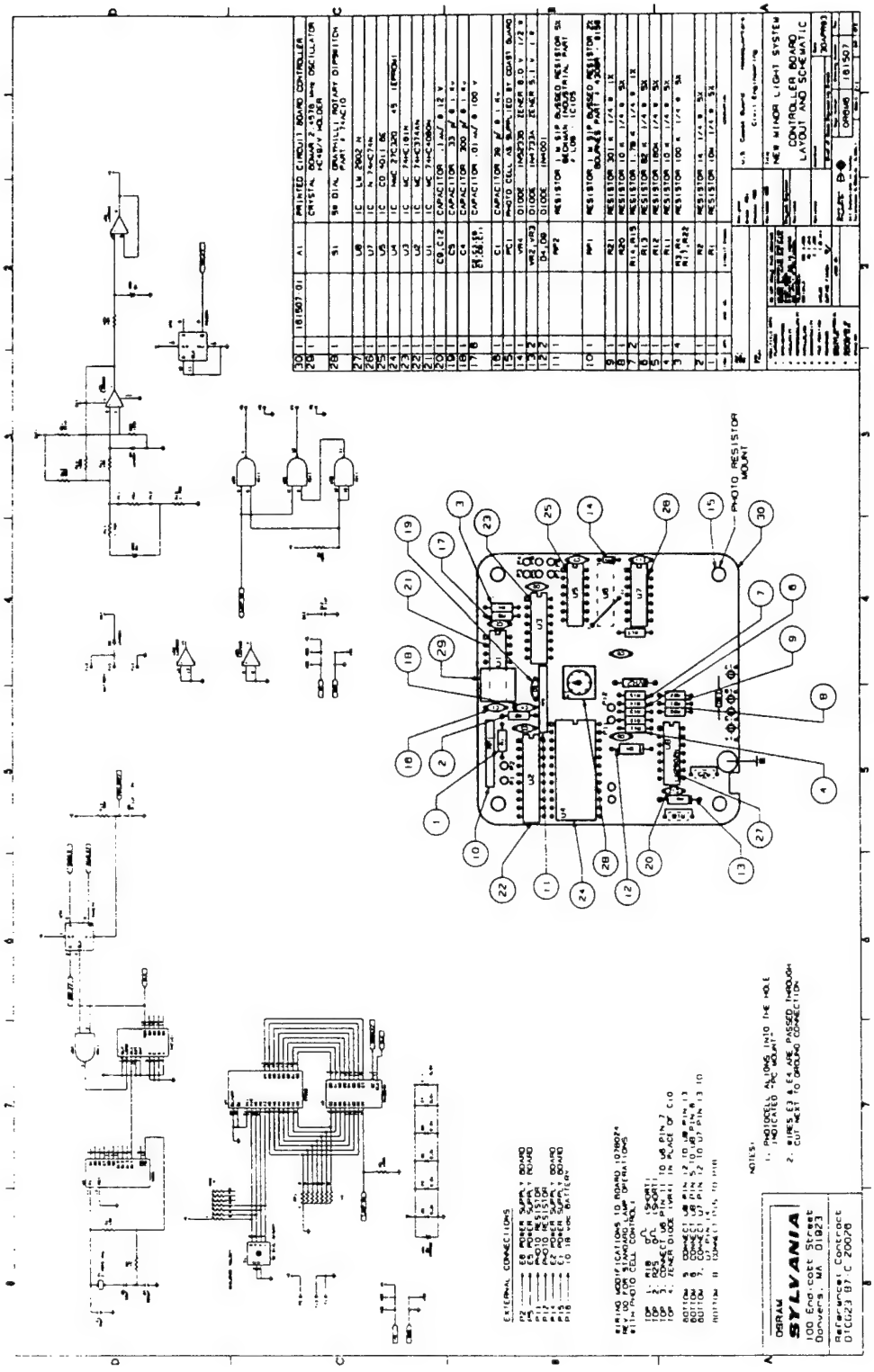

Drawing #161507, Controller Board Layout and Schematic

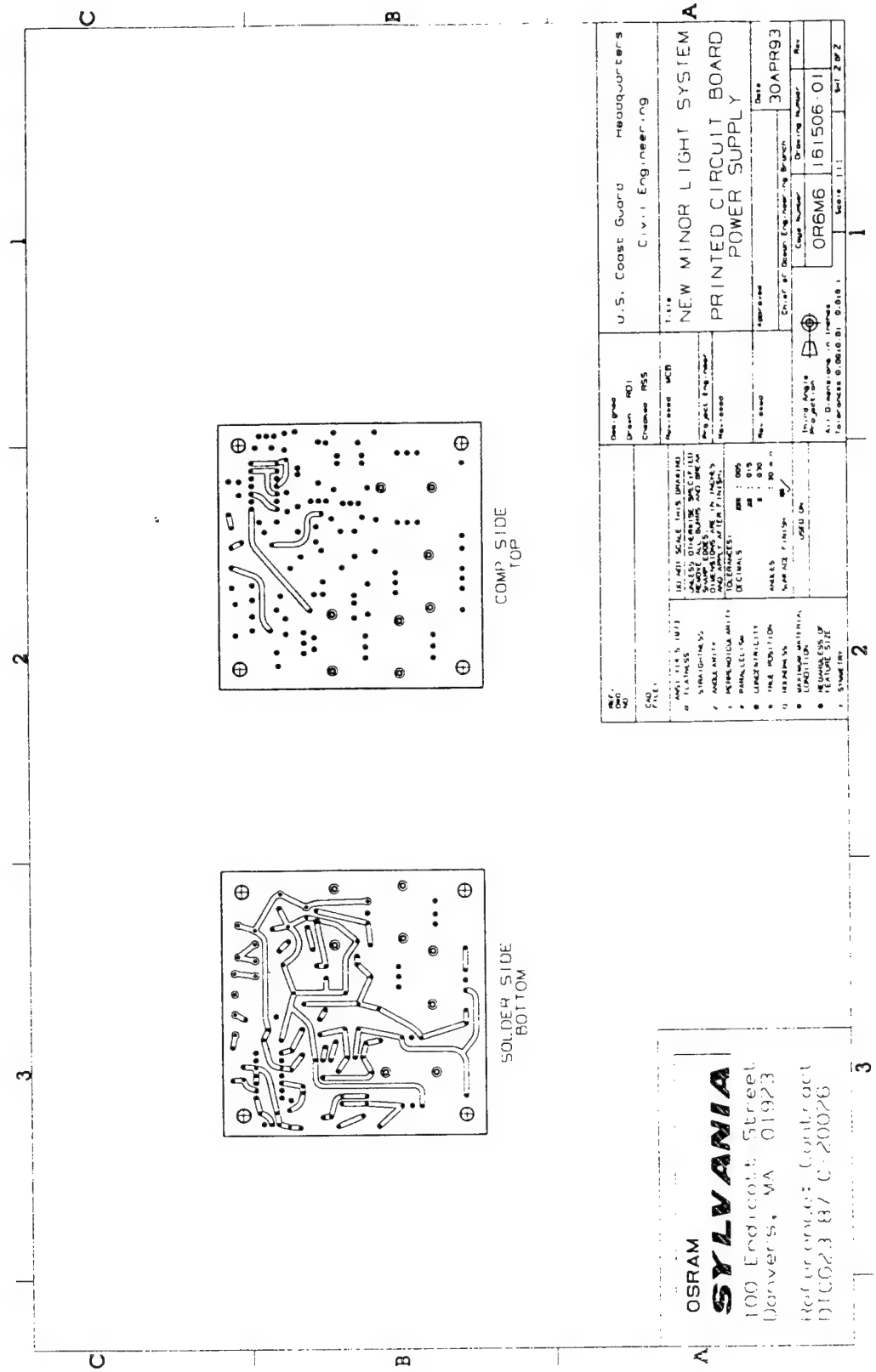

Drawing #161506-01, Printed Circuit Board, Power Supply

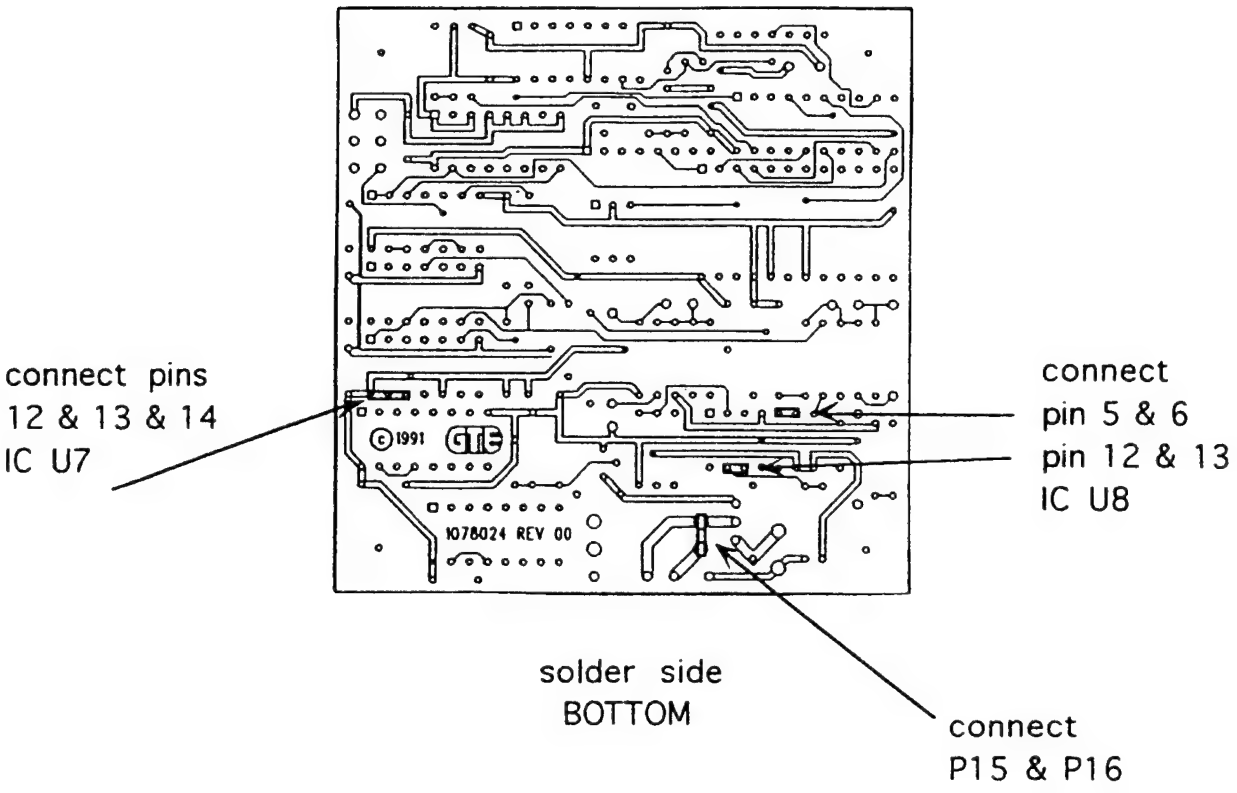

(a)

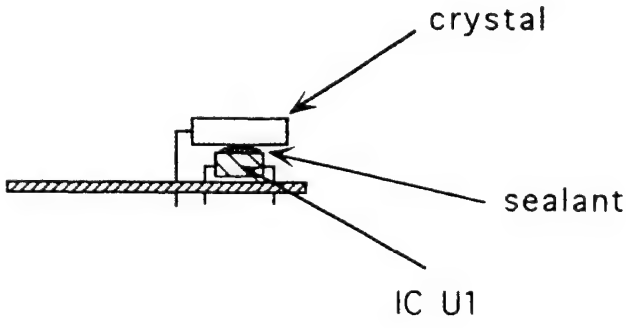

(b)

Figure 7-3. Pin Connections and Oscillator Crystal Mounting on Controller Board

7.2.3 Mounting Photoresistor

1. Parts and Materials

    1. Solder - Kester SN60PB40, 0.031, QQS571E WRAP 3, 24-6040-0027
    2. Photoresistor Mount Holder per Drawing #161504-03
    3. Controller board per Drawing #161507
    4. Photoresistor - U.S. Coast Guard NSN #5980-01-031-8858

2. Tools and Equipment

    1. Soldering iron

3. Procedure

    1. Clip, strip and tin the end leads of the photoresistor, leaving as much wire as possible to solder into the controller board.
    2. Slide the stripped wires through the top of the mount holder
    3. Solder the wires to pin numbers 12 and 11 of the controller board. The polarity is not critical.

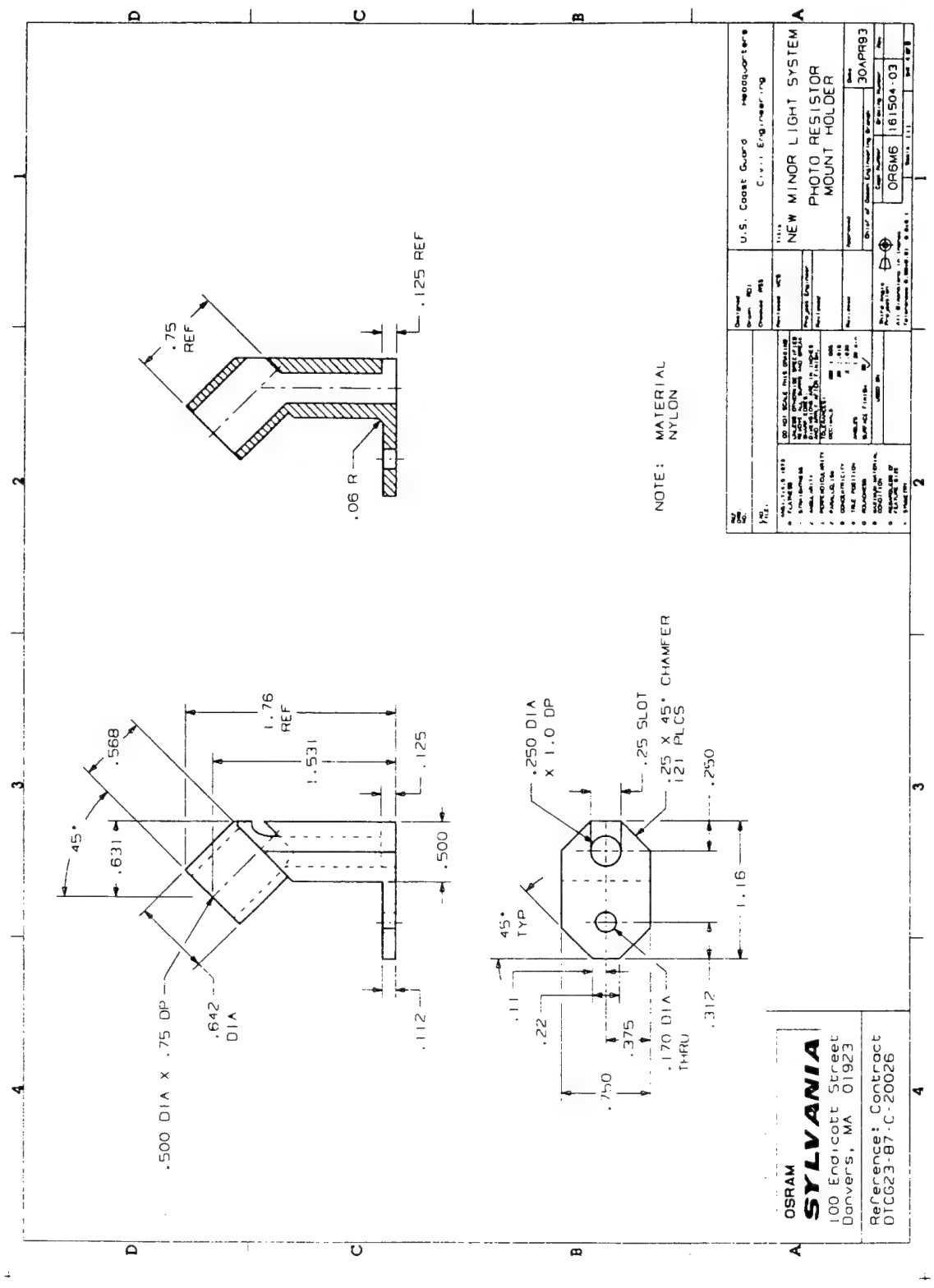

Drawing #161504-03, Photo Resistor Mount Holder

7.3 Power Supply Box Cover

7.3.1 Base Connector Assembly

1. Parts and Materials

    1. Lamp wire - PVC hook up wire, 20AWG 7x #28 tinned Copper, 0.010" PVC insulation.
       Red and black
    2. Base connector - Packard Electric Connector, Part #12059183
    3. Grommet - Packard Electric Cable Seal, Part #12015899 Type 103 Red
    4. Lead - Packard Electric Terminal, Part #12015823 Type 102

2. Tools and Equipment

    1. Crimping tool - Pioneer STD Electronics, part #GM12014254

3. Procedure

    1. Strip 0.250" of insulation off of two 6" lengths of lamp wire (one red and one black)
    2. Slip the grommet over the insulation
    3. Crimp the lead per Figure 7-4.
       The crimp must be made with the crimping tool specified in the equipment list.
    4. Orient the leads such that the latching arm is toward the middle of the connector and slide it in until it catches.
       Make sure that the grommet is well seated in the base hole of the connector.

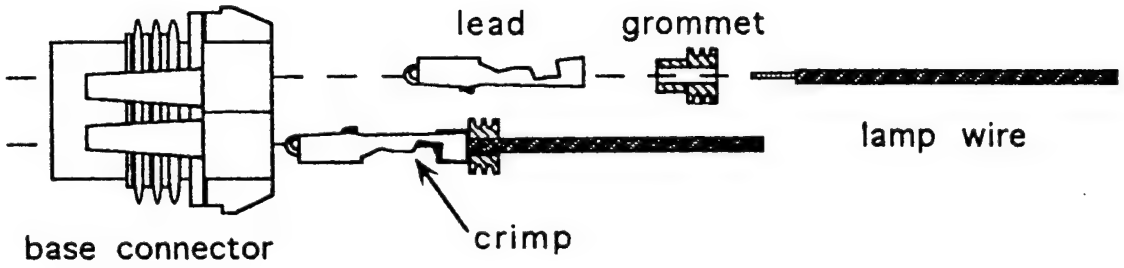

Figure 7-4. Base Connector Assembly

7.3.2 Mounting Base Connector

1. Parts and Materials

    1. Emerson & Cuming Stycast 2057 epoxy resin
    2. Emerson & Cuming Catalyst #9
    3. Clay/putty
    4. Base connector per Section 7.3.1
    5. Power supply box cover per Drawing #161504-01

2. Tools and Equipment:

    1. Weight scale with 3 kg capacity
    2. 8 ounce paper cups

3. Procedure

    1. Clean out the well of the power supply box cover.
    2. Pass the wires through so that the base connector fits into the recess and is oriented per Drawing #161502 with the clip side of the base connector facing the lamp assembly anchor screw hole.
    3. Weigh-out 30 grams of Stycast 2057
    4. Mix with 2 grams of catalyst #9 in a paper cup.
    5. Tug on the wires to properly seat the connector and place two small dollops of clay or putty around the holes to prevent the passage of epoxy.
    6. Place the top on a level surface with clearance for the wires
    7. Pour the epoxy in until it just covers the "V" section of the base connector, about 0.200" deep.
       To secure the base connector and insure proper alignment a blank lamp base can be used to hold the base connector in place or a fixture of choice can be used.
    8. Let the epoxy set for 8 hours.

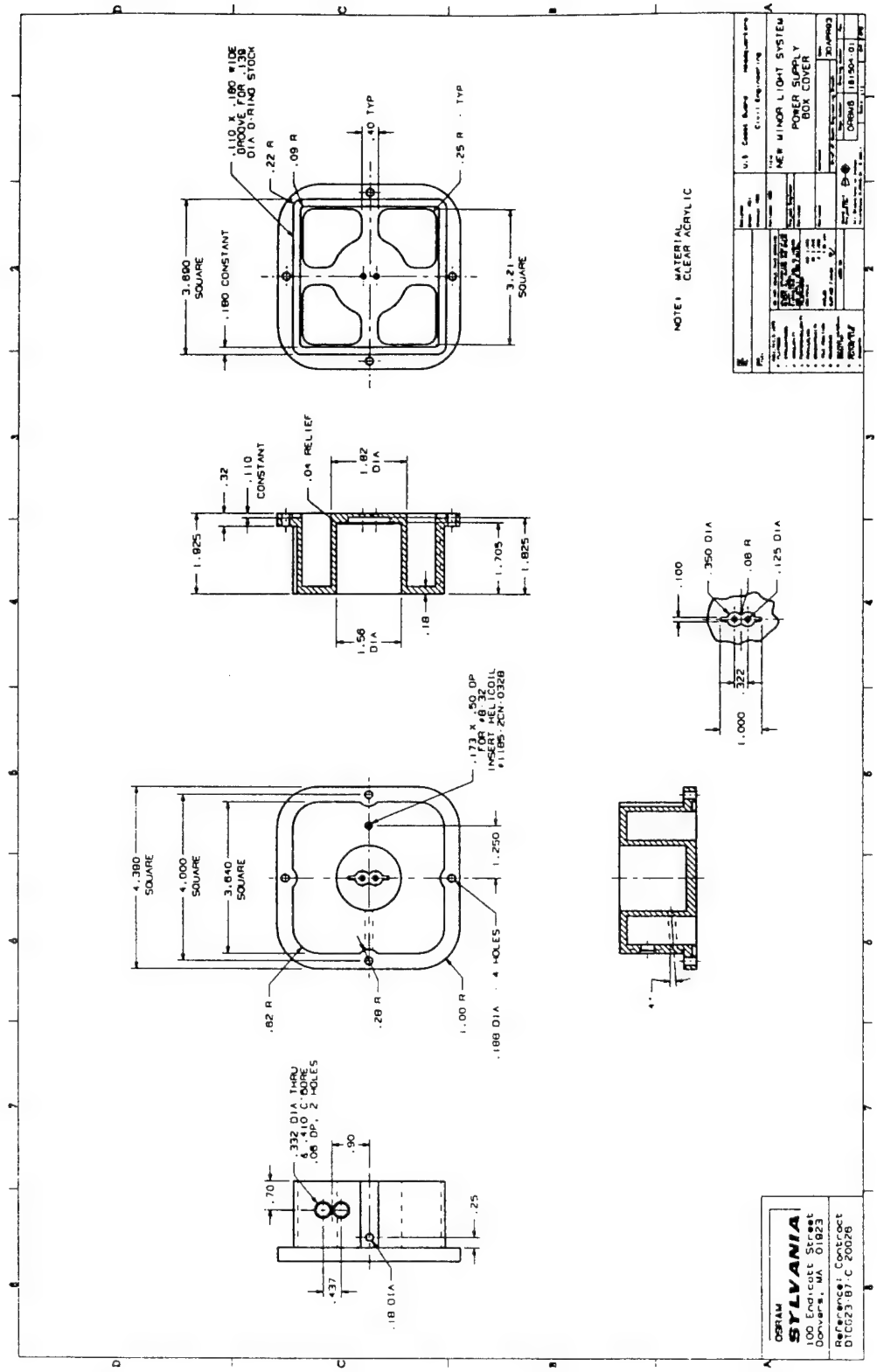

Drawing #161504-01, Power Supply Box Cover

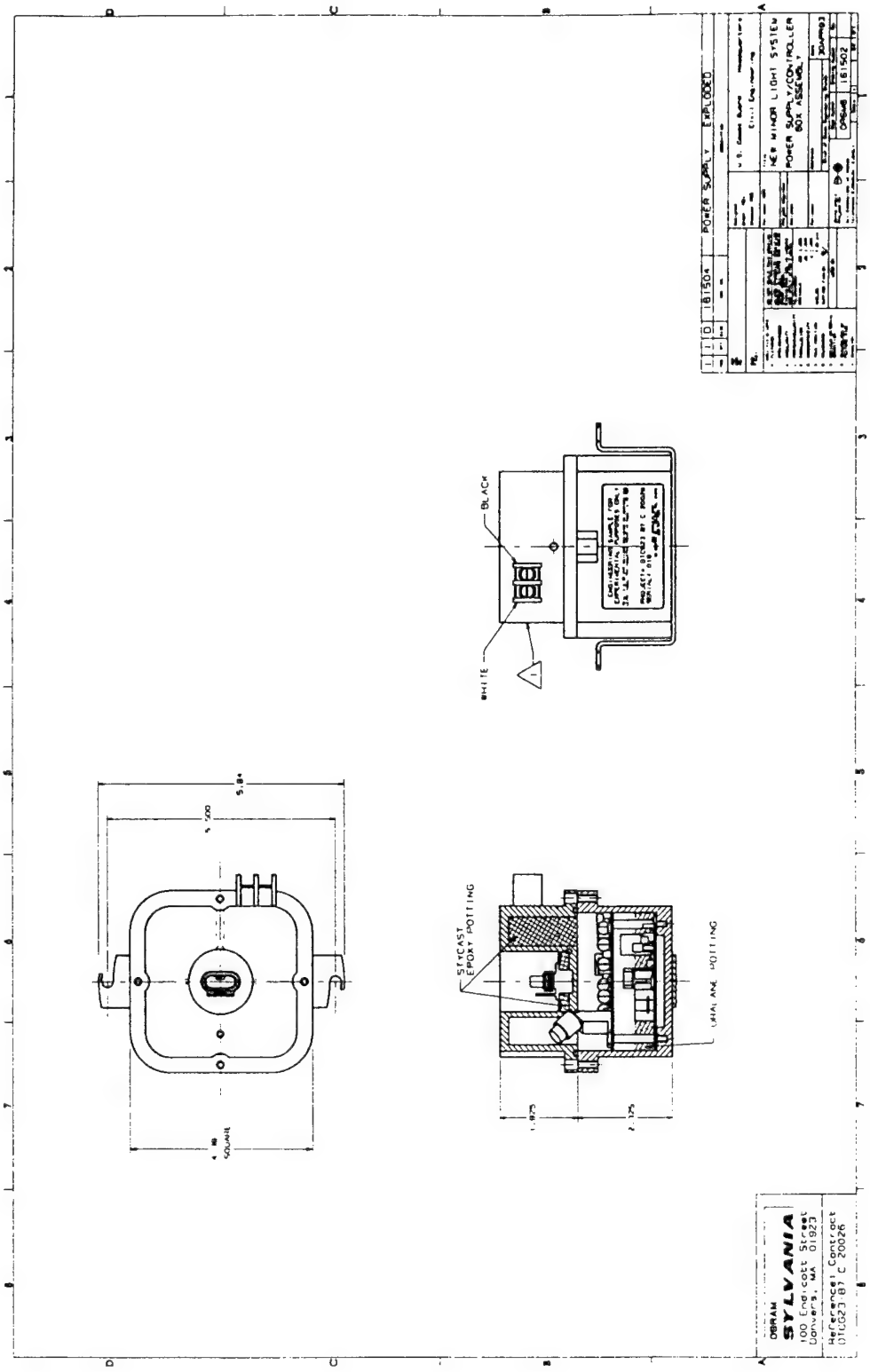

Drawing #161502, Power Supply / Controller Box Assembly

7.3.3 Battery Terminals

1. Parts and Materials

    1. Emerson & Cuming Stycast 2057 epoxy resin
    2. Emerson & Cuming Catalyst #9
    3. Solder - Kester SN60PB40, 0.031, QQS571E WRAP 3, 24-6040-0027
    4. Lamp wire - PVC hook up wire, 20AWG 7x #28 tin-copper with 0.010" PVC insulation - red and black
    5. 5-minute epoxy - GC Electronics "QUIK STIK", Catalog #10-114
    6. Spray paint - KRYLON flat white #1502, interior/exterior spray enamel
    7. Power supply per Section 7.3.2
    8. Power Supply Box Cover per Drawing #161504-01
    9. Terminal block - Beau - Barrier Terminal, part #73202-49-C per Drawing #161504-02

2. Tools and Equipment

    1. Soldering iron
    2. Weight scale with 3 kg capacity
    3. 8 ounce paper cups

3. Procedure

    1. Spray paint one of the terminal block housings with white paint so that one connection is black and one is white.
    2. When the paint has dried, solder two 8" lengths of lamp wire to the terminal blocks: red wire to black post
black wire to white post
    3. Feed the lamp wires through the two terminal holes in the power supply box cover.
    4. Fasten the terminal block into place with 5-minute epoxy.
    5. When the epoxy has set, flip the piece upside-down to fill the corner well with the black potting.
    6. Weigh-out 60 grams of Stycast 2057 and 4.2 grams of catalyst #9 and mix well.
    7. Pour this into the well with the terminal block wires extended out beyond the rim of the well.
    8. Allow the epoxy to set 8 hours.

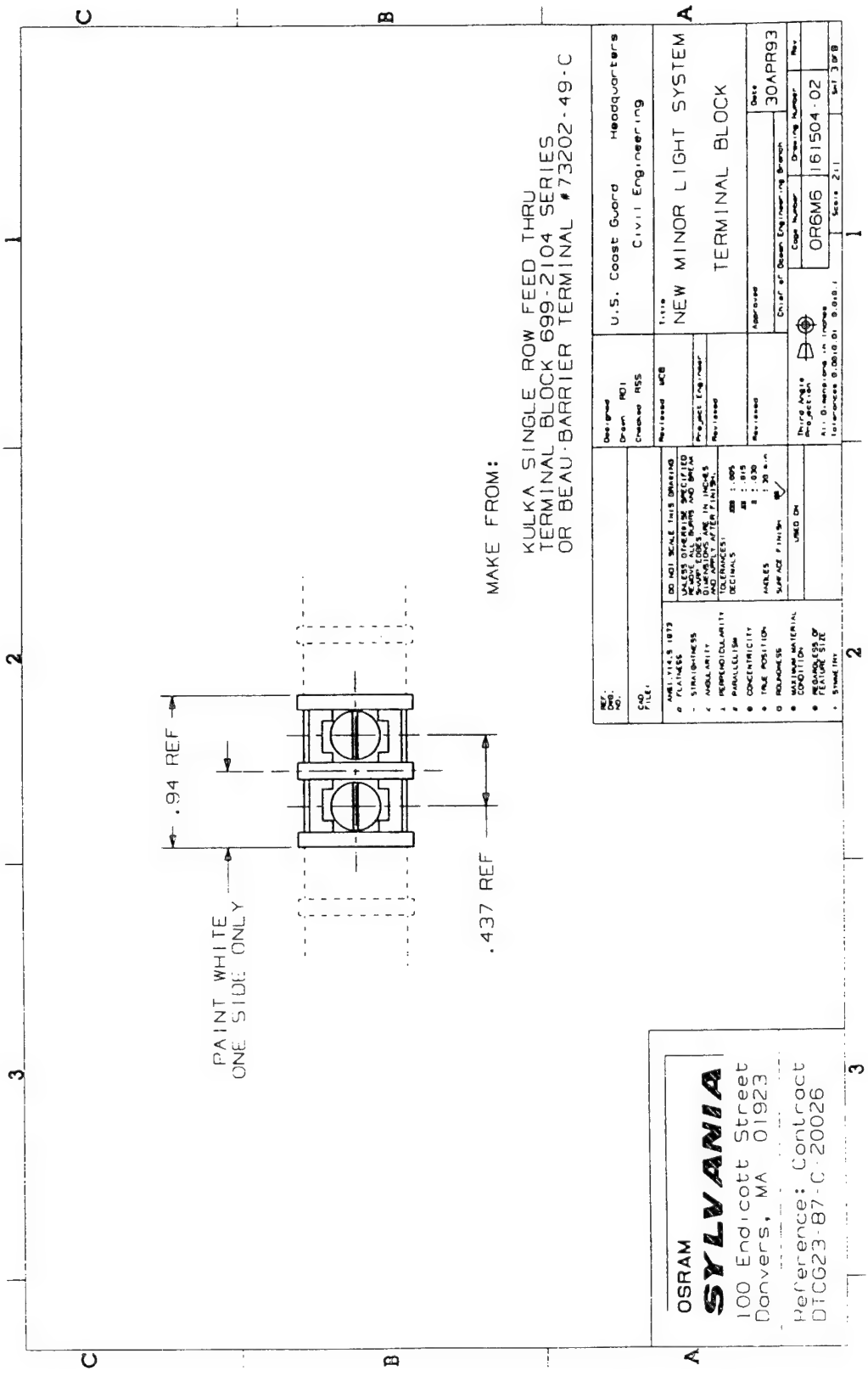

Drawing #161504-02, Terminal Block

7.4 Power Supply Box Bottom

7.4.1 Wiring Boards

1. Parts and Materials

    1. Solder - Kester SN60PB40, 0.031, QQS571E WRAP 3, 24-6040-0027
    2. Lamp wire - PVC hook-up wire, 20AWG 7x #28 tin-copper with 0.010" PVC insulation, red and black
    3. Power Supply Board per Section 7.1
    4. Controller Board per Section 7.2

2. Tools and Equipment

    1. Soldering iron
    2. Wire cutters/strippers

3. Procedure

    1. Cut the terminal wires to an appropriate length to connect to the Controller Board.
    2. Tin the ends.
    3. Solder the red wire to connection P16 ("BATT") per Drawing # 161507.
    4. Solder the black wire to the ground connection ~1" to the left of P16 per Drawing #161507.
    5. Cut and strip two pieces of lamp wire: one red and one black.
    6. Connect the red wire between P5 of the controller board (Drawing #161507) to the E5 connection of the power supply board (Drawing #161506).
    7. Connect the black wire between P2 of the control board to E6 of the power supply board.
    8. Cut and strip the ends of the lamp wires connected to the base connector, leaving enough length to reach the power supply board at the bottom of the power supply base.
    9. Solder the red wire to E3 and the black wire to E4 .
    10. Align the boards so that the lamp wires will pass through the side cut-out of the controller board and fit into the power supply box bottom per Drawing #161504.

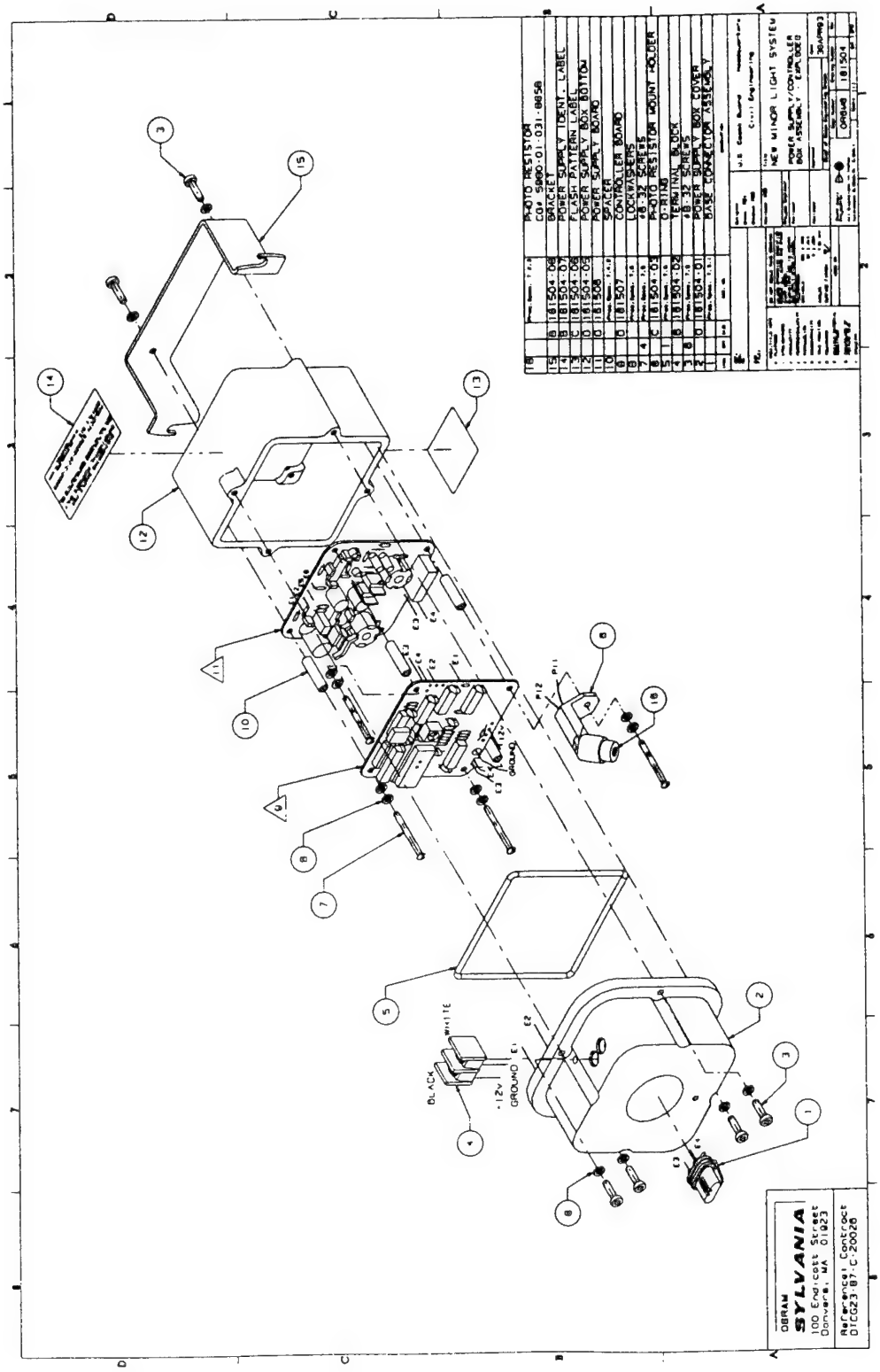

Drawing #161504. Power Supply / Controller Box Assembly, Exploded

7.4.2 Potting Power Supply Board

1. Parts and Materials

    1. CIBA-GEIGY Uralane 5753 potting material part A
    2. CIBA-GEIGY Uralane 5753 potting material part B
    3. Power supply per Drawing #161504-05
    4. Power supply box bottom per Drawing #161504-05
    5. #6 screws: 6-32 1.5" long round head (stainless), qty 4
    6. 0.17" I.D. x 0.25" O.D. x 1.00" long nylon spacers
       - Allied Electronics type C 898 Stock #839-2244
    7. Wired boards per Section 7.4.1

2. Tools and Equipment

    1. Weight scale with 3 kg capacity
    2. 8 ounce paper cups
    3. Screw driver

3. Procedure

    1. Place the power supply board into the bottom of the power supply box bottom per Drawings #161504 and #161502
    2. Place the #6 screws through the holes in each corner and into the spacers.
    3. Weigh-out 50 grams of Uralane 5753, part A into a cup.
    4. Thoroughly mix in 10 grams of Uralane 5753, part B.
    5. Pour the mixture over the board to a depth of 0.250" above the surface of the printed circuit board per Drawing #161502 (enough to secure the electrical components).
    6. Allow the Uralane to set 10-12 hours at room temperature.

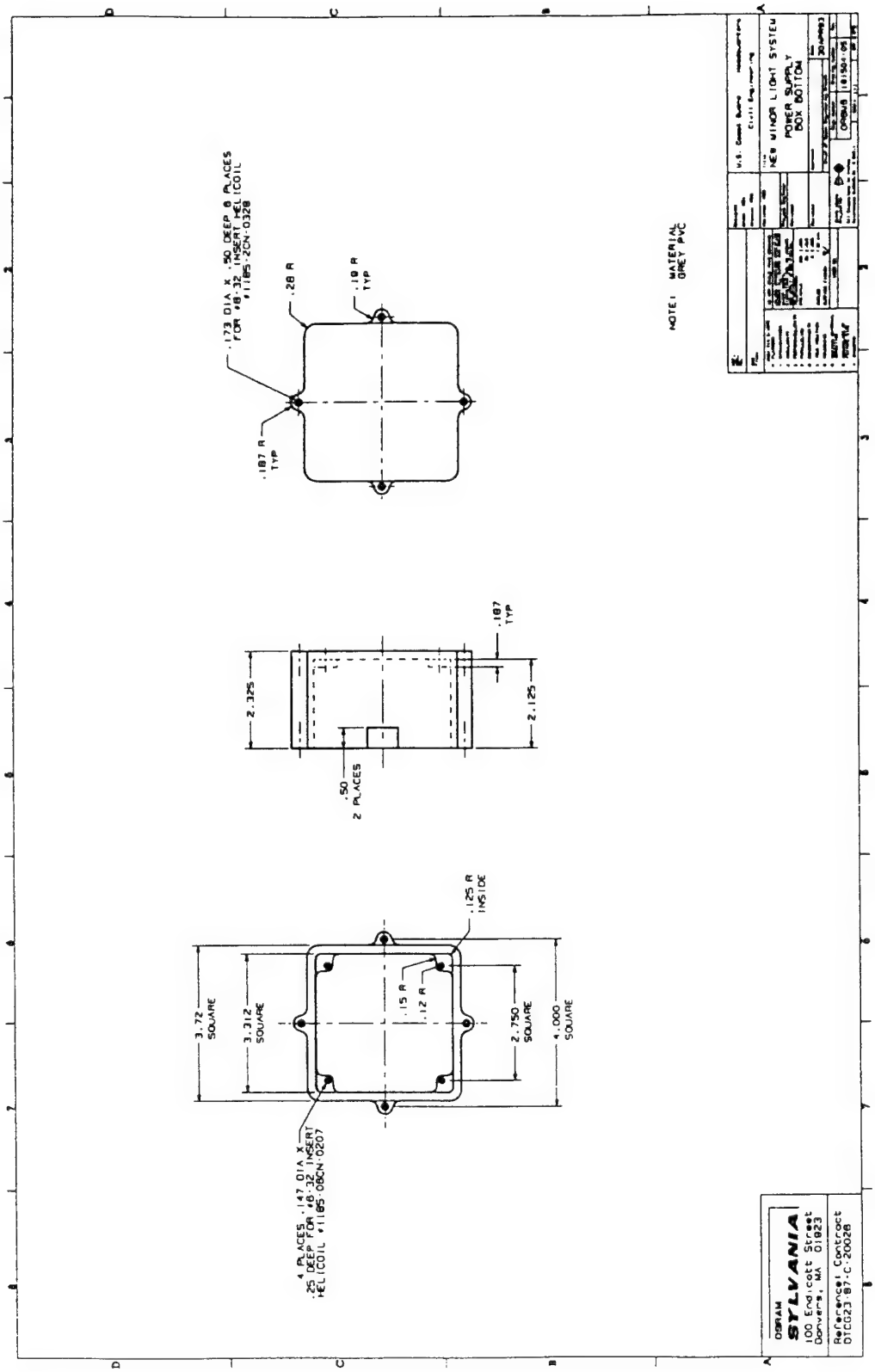

Drawing #161504-05 Power Supply Box Bottom

7.5 Final Assembly

1. Parts and Materials

    1. O-ring - Viton STS-70-442, nominal diameter 0.139"
    2. #6 screws: 6-32, 1.5" long round head (stainless), qty 4
    3. #8 screws: 8-32, 0.75" long round head (stainless), qty 7 (includes 1 securing screw for lamp)
    4. Lock washers - stainless steel, #6 and #8
    5. Power supply box cover per Section 7.3
    6. Power supply box bottom per Section 7.4
    7. Bracket per Drawing #161504-08
    8. Power supply identification label per Drawing #161504-07
    9. Flash pattern label per Drawing #161504-06
    10. Lamp assembly per Section 6.4

2. Tools and Equipment

    1. Screw driver

3. Procedure

    1. After the Uralane has set, remove the #6 screws
    2. Place the controller board above the spacers oriented per Drawings #161504 and #161502.
    3. Place the photoresistor mount holder in the appropriate corner per Drawing #161504.
    4. Using two lock washers around each screw fasten the board to the power supply box bottom base.
    5. Slip the O-ring over the acrylic top and fit it into the groove.
    6. Set the rotary DIP switch to the appropriate assignment, referencing the label on the outside of the power supply housing.
    7. Carefully locate the top piece of the power supply box over the bottom. Do not snap off the photoresistor mount unit.
    8. Screw the 4 #8 screws with lock washers into the side flanges of the PVC base, taking care not to pinch the wiring or introducing any debris to compromise the O-ring seal.
    9. Place labels on power supply per Drawing #161504.
    10. Screw the bracket to the box bottom per Drawing #161504.

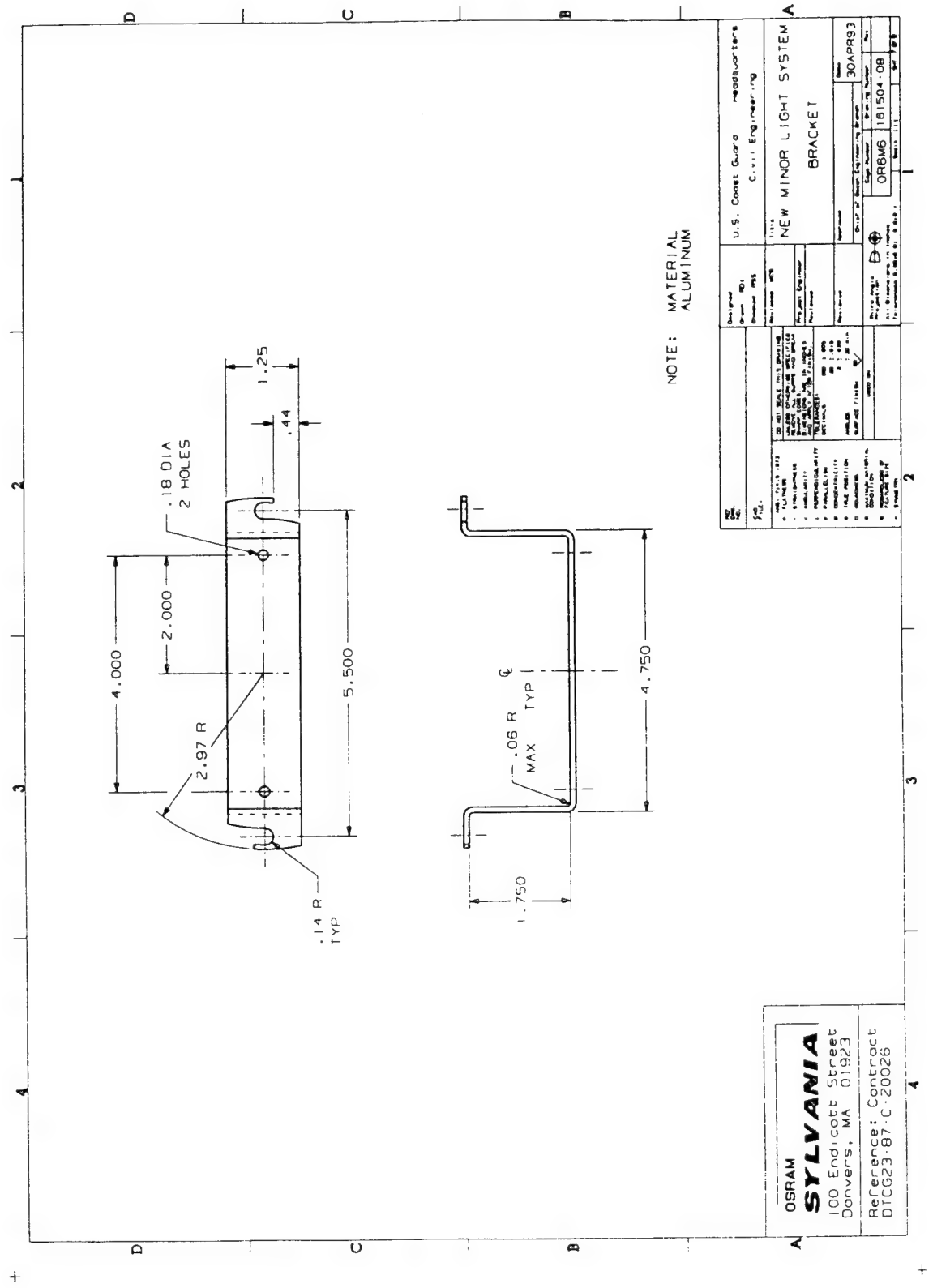

Drawing #161504-08, Bracket

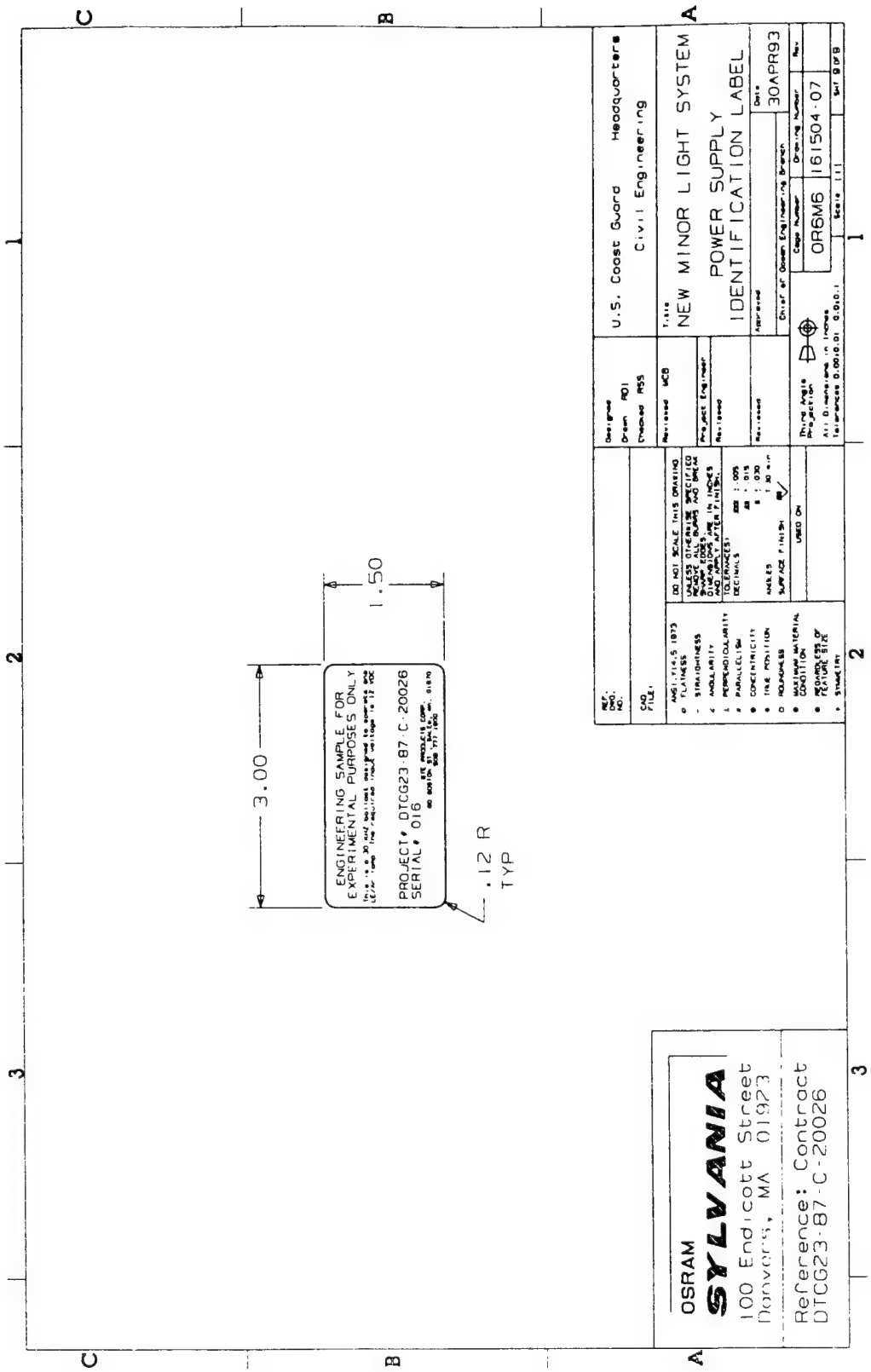

Drawing #161504-07, Power Supply Identification Label

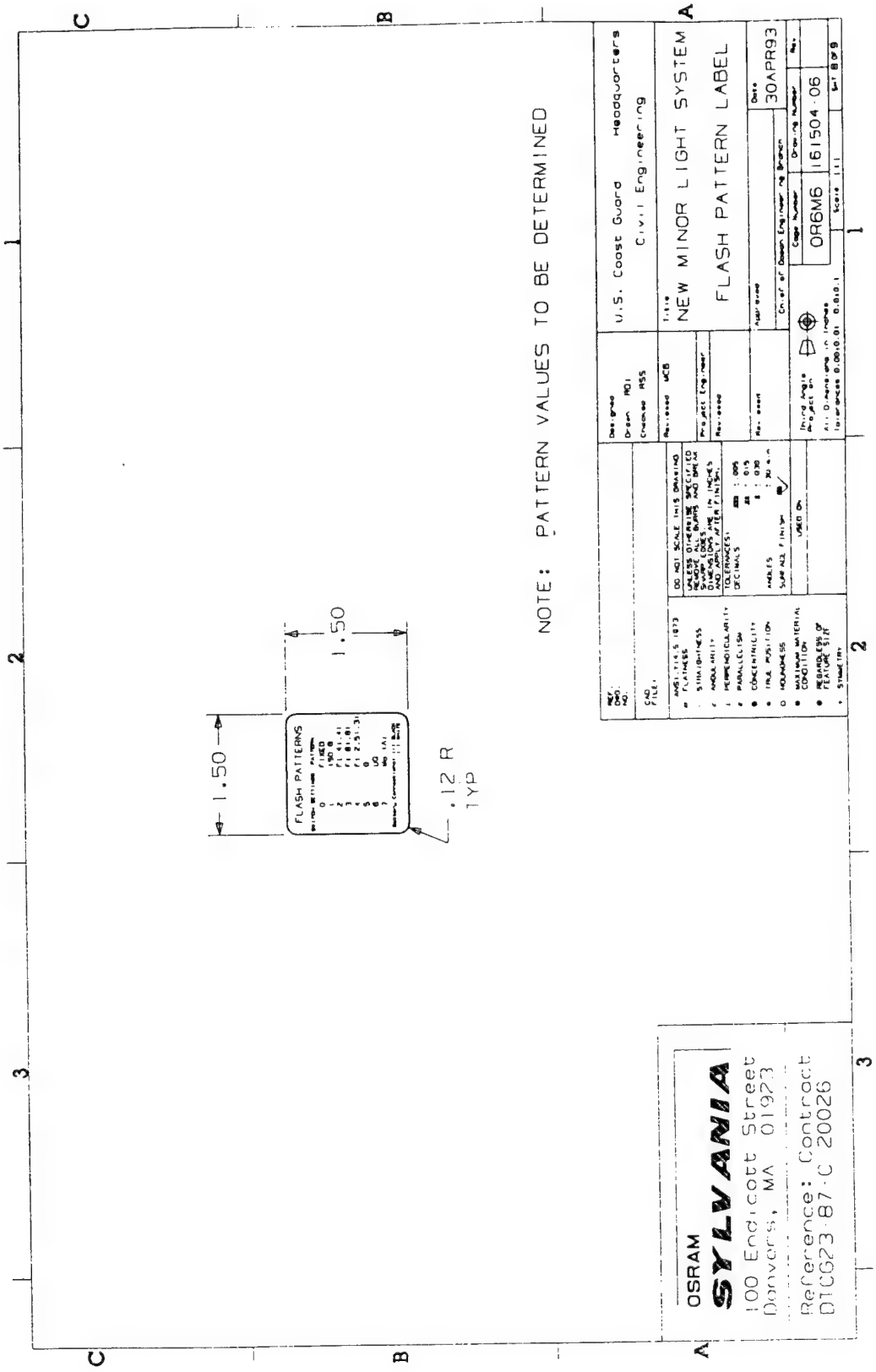

Drawing #161504-06. Flash Pattern Label

8. TEST EQUIPMENT AND PROCEDURES

8.1 High Voltage Lamp Power Unit

1. Parts and Materials

    1. Lamp base assembly per Section 6.1.2
    2. High-voltage transformer per Section 6.2.1
    3. 0.010" thick x 0.060" wide nickel ribbon
    4. 10kV rated insulated wire
    5. Alligator clips
    6. 18 gauge insulated wire
    7. 600V black 3/4" electrical tape
    8. Solder
    9. 8 ounce paper cups
    10. Emerson & Cuming Stycast 2057 epoxy resin
    11. Emerson & Cuming Catalyst #9

2. Tools and Equipment

    1. Coiled LE/Ar lamp per Section 5
    2. Power supply unit per Section 7
    3. High-frequency power meter
    4. 12V DC power supply
    5. 150g capacity or greater weight balance
    6. Vacuum chamber
    7. Soldering iron
    8. Electric spot welder
    9. Wire cutters / stripper
    10. Carborundum glass-cutting saw
    11. Diamond file
    12. Ring stand
    13. 3-prong clamp
    14. Test lead wires with banana plugs or alligator clips on each end

3. Procedure

1. Place lamp assembly into the ring stand and gently clamp into place above the lamp base.
2. Tune lamp to 3.0W per Section 6.3
3. Cut two pieces of 10kV wire 6" long and strip ends of wire.
4. Solder wires to high-voltage / current coil assembly per Figure 6-2 in Section 6.4
    1. Solder one end of one piece of 10kV wire to A.
    2. Solder one end of the other piece of 10kV wire to B.
5. Place the high voltage / current coil assembly into the lamp base. Be sure the electronic components are well below the top rim of the base cylinder and no exposed wires, inside, are touching.
6. Mix-up potting epoxy.
    1. Weigh-out 100 grams of StyCast 2057 Epoxy Resin into a paper cup.
    2. Add 7 grams of catalyst #9 and mix them thoroughly.
    3. Place the cup into a small vacuum chamber and pull a rough vacuum on the mixture for 10 minutes.
       This will remove most of the large bubbles trapped within the mixture.
    4. Bring the chamber back to atmospheric pressure and take out the cup.
7. Pour the epoxy into the base cylinder until it covers the transformer and current coil.
   Note: The potting is very viscous and black, use caution to not over-fill the base or get any on skin or on clothing.
8. Let the potting set for 8 or more hours at room temperature.
9. Fasten and solder alligator clips to the exposed ends of the 10kV wire.
10. Wrap electrical tape around the alligator clips.

8.2 Lamp Mounting Assembly

1. Parts and Materials

    1. Aluminum bar stock, 3" long x 1/2" wide x 1/4" thick
    2. Push post clip
    3. 8-32 round head stainless steel screw
    4. 1/2" diameter x 3/4" long ceramic spacer threaded for 8-32 screws
    5. Laboratory stand
    6. Right angle laboratory stand clamp per Figure 8-1

2. Tools and Equipment

    1. Electric drill
    2. 3/16" drill bit
    3. Slotted screw driver

3. Procedure

    1. Drill a 3/16" hole in the aluminum bar 1" from one end.
    2. Screw the push post into one end of the ceramic spacer.
    3. Attach the ceramic spacer / push post assembly to the aluminum bar using the round head screw such that the slot in the push post is aligned vertically.
    4. Secure the utility clamp to the laboratory stand so that the fingers are aligned vertically (i.e., on top of each other).
    5. Secure the aluminum bar inside the fingers of the laboratory clamp with the bar horizontal per Figure 8-1.

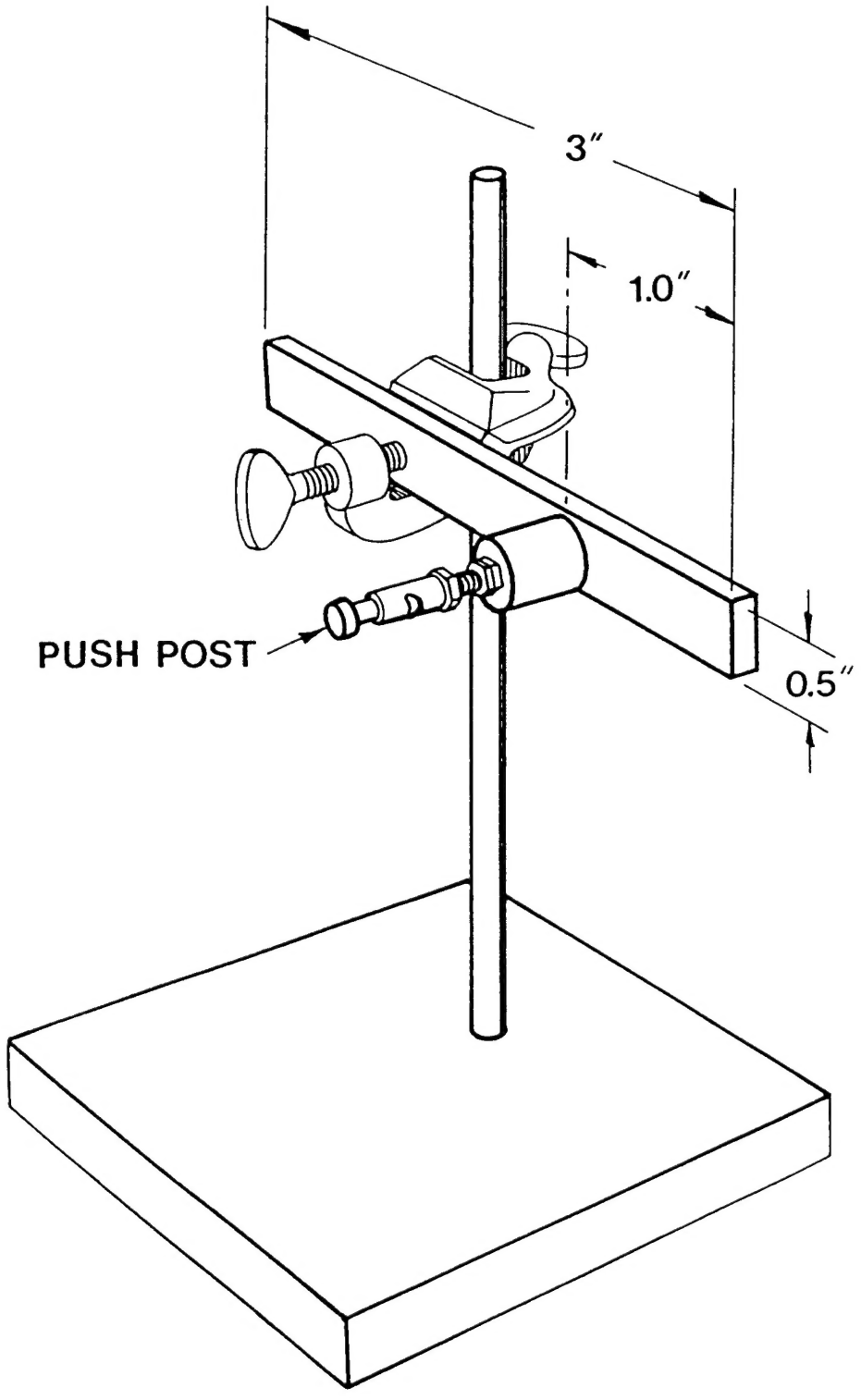

Figure 8-1. Lamp Mount Assembly for Test Set-Up

8.3 Testing Lamps

1. Parts and Materials

    1. Coiled lamp per Sections 2.2.2, 3.3, 4.2.2 or 5.5

2. Tools and Equipment

    1. Power supply per Section 7
    2. High-voltage lamp power unit per Section 8.1
    3. Lamp mount assembly per Section 8.2
    4. Two channel oscilloscope
    5. 2 100X or 1000X voltage probes
    6. 12V DC power supply
    7. 2 wires with banana plugs on one end and alligator clips on the other end, 12" to 18" long
    8. 2 wires stripped at one end and with banana plugs at the other end, 12" to 18" long, one white and the other black
    9. Glass (not quartz) sleeve 3" to 6" long with a 1" inner diameter

3. Procedure

1. Mount lamp in lamp-holding assembly.
2. Slip the glass sleeve over the lamp if it is not jacketed.
3. Plug high-voltage power unit into the base connector on the power supply unit.
4. Connect the banana plug end of the lead wires to the alligator clips on the high voltage power unit.
5. Connect the voltage probes.
    1. Connect one voltage probe to each channel of the oscilloscope.
    2. Run the oscilloscope in differential mode (A + (-B)).
    3. Clip a voltage probe to each alligator clip on the high-voltage power unit.
6. Adjust the DC power supply to 12.0V.
7. Connect the stripped ends of the lead wires to the power supply unit.
    1. White wire = Negative - goes to white terminal
    2. Black wire = Positive - goes to black terminal
8. Connect the lead wires from the power supply unit to the DC power supply.
    1. White lead = Negative
    2. Black lead = Positive
9. Connect the alligator clips on the lead wires to the inlead wires on the lamp.
10. Turn-on the DC power supply.
11. Lamp passes if all of the following criteria are met:
    1. Lamp lights-up right away
    2. Lamp does not flicker
    3. Lamp voltage displays a stable, triangular-shaped waveform on the oscilloscope.
    4. The lamp's peak-to-peak voltage is < 900V.
    5. Lamp has the following colors:

        - Bare LE/Ar coil: Medium blue color, not too purple
        - Jacketed LE/Ar lamp with green phosphor: Leaf green color, not too blue
        - Neon lamp: Red

12. Turn-off lamp.
13. Disconnect and take-down lamp.
    1. Remove lead wires from lamp.
    2. Remove glass sleeve from lamp.
    3. Remove lamp from mounting apparatus.